RECERTIFICATION OF

PROVISIONALLY ACCREDITED LEVEE P52

on

LOWER PENITENCIA CREEK

in

MILPITAS, CALIFORNIA

(Community No. 060344)

July 2009

Santa Clara Valley Water District

Schaaf & Wheeler

CONSULTING CIVIL ENGINEERS

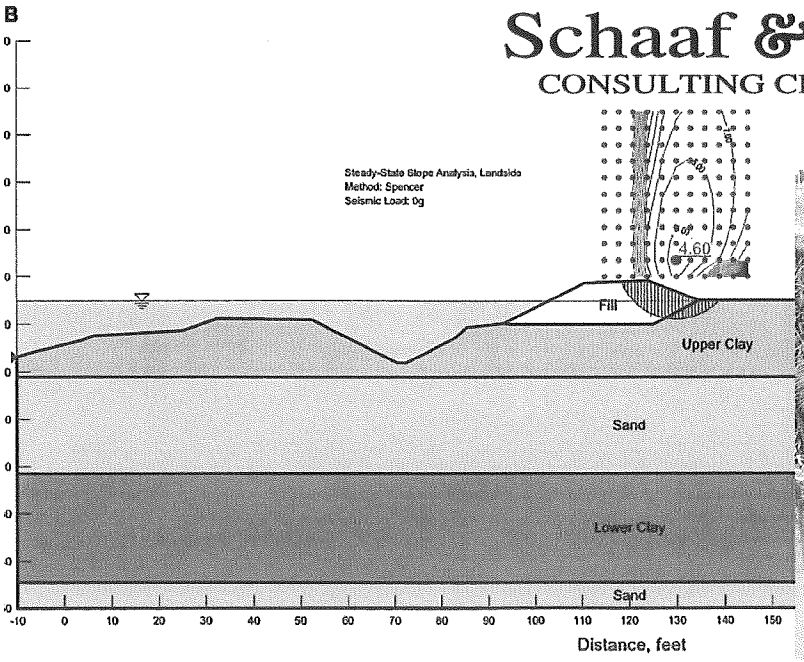

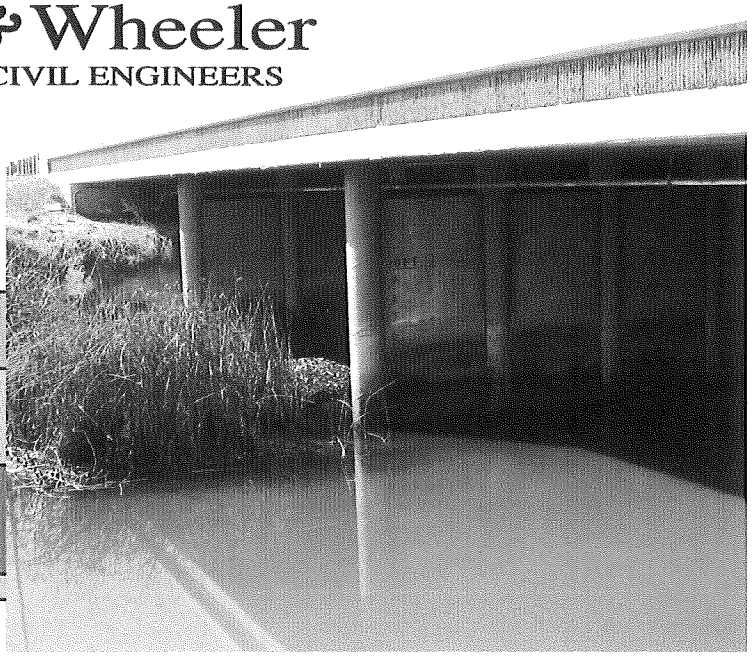

TC
425
P45.R42
2009
c.1
LIBRARY

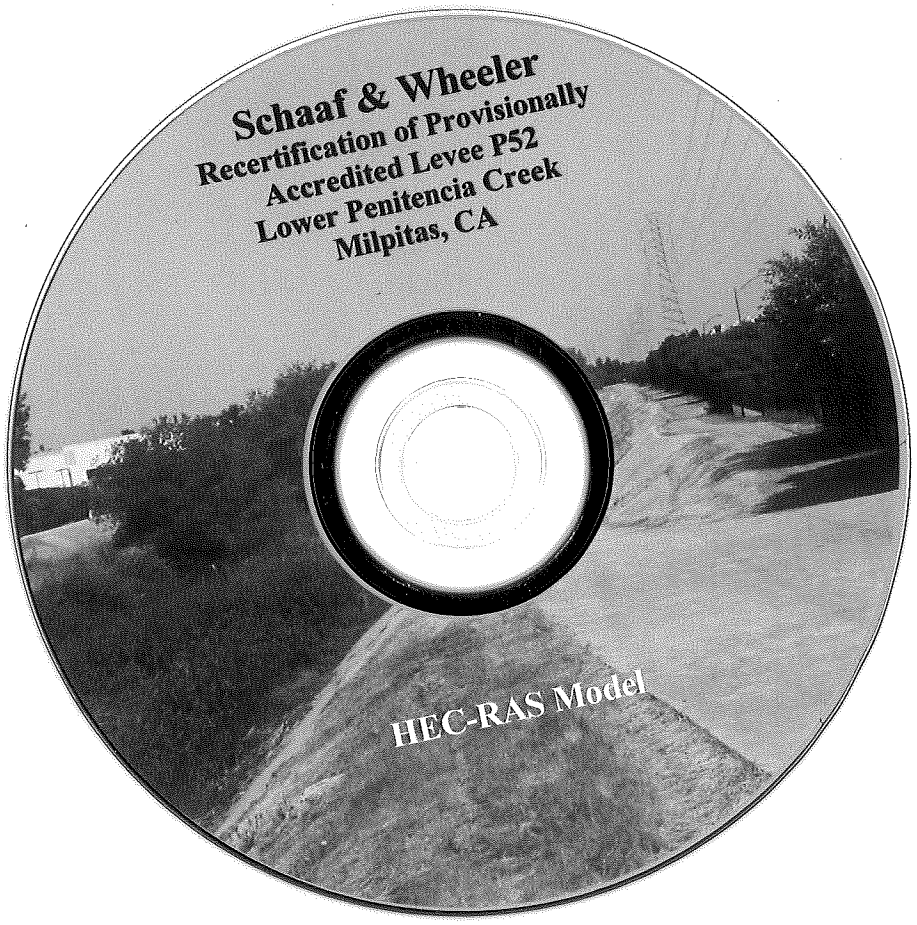
Schaaf & Wheeler
Recertification of Provisionally
Accredited Levee P52
Lower Penitencia Creek
Milpitas, CA
HEC-RAS Model

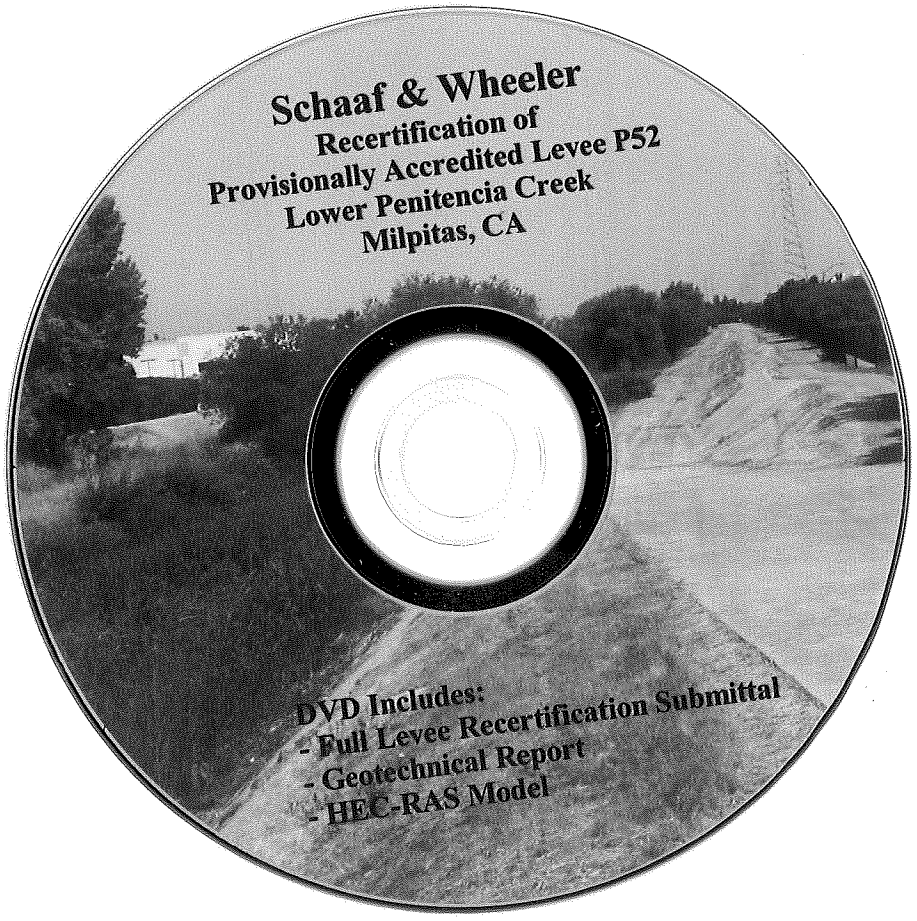
Schaaf & Wheeler
Recertification of
Provisionally Accredited Levee P52
Lower Penitencia Creek
Milpitas, CA
DVD Includes:
- Full Levee Recertification Submittal
- Geotechnical Report
- HEC-RAS Model

TC425 P45R422 2009c.1

Schaaf & Wheeler
CONSULTING CIVIL ENGINEERS

James R. Schaaf, PE
Kirk R. Wheeler, PE
David A. Foote, PE
Peder C. Jorgensen, PE
Charles D. Anderson, PE

100 N. Winchester Blvd., Suite 200
Santa Clara, CA 95050-6566
(408) 246-4848
FAX (408) 246-5624
s&w@swsv.com

Offices in
Monterey Bay Area
Sacramento
San Francisco

July 7, 2009

Mr. Eric Simmons, CFM
National Flood Insurance Program
FEMA Region IX
1111 Broadway, Suite 1200
Oakland, CA 94609
(510) 627-7029

Subject: Recertification of Provisionally Accredited Levee P52 on Lower Penitencia Creek in Milpitas, California

Dear Mr. Simmons:

On behalf of the Santa Clara Valley Water District and City of Milpitas, I hereby submit the documentation and engineering analyses necessary to obtain full accreditation for Levee P52 from its downstream end just east of Interstate 880 to its upstream end at the confluence with Berryessa Creek in Milpitas. It is my professional opinion that the subject levees meet the requirements of 44 CFR §65.10.

Enclosed is an application for the recertification of the levee on the east bank of Lower Penitencia Creek. Our submittal is organized as follows:

Tab 1	MT-2 Forms 1, 2, and 3
Tab 2	Annotated FIRM and FIS Profile
Tab 3	Survey Report and LiDAR Metadata
Tab 4	Topographic Work Maps
Tab 5	Record Drawings
Tab 6	Freeboard Evaluation
Tab 7	Engineering Analyses
Tab 8	Interior Drainage
Tab 9	Operation and Maintenance

SANTA CLARA VALLEY WATER DISTRICT
LIBRARY
5750 ALMADEN EXPRESSWAY
SAN JOSE, CALIFORNIA 95118

The following documentation and analyses are bound separately and enclosed with this application:

Geotechnical Investigation (AMEC Geomatrix, 2009)

Digital HEC-RAS model on CD (Schaaf & Wheeler, 2009)

Levee Safety Technical Guidance Manual (URS, 2002)

Thank you very much for accepting our levee recertification package for Lower Penitencia Creek in Milpitas. Please direct technical questions regarding this application to Liza McNulty or me.

Very truly yours,
SCHAAF & WHEELER

Charles D. Anderson

Charles D. Anderson, PE
President

Enclosures

cc: Robert van den Berg, Santa Clara Valley Water District
Robert Wang, City of Milpitas

Tab 1

U.S. DEPARTMENT OF HOMELAND SECURITY - FEDERAL EMERGENCY MANAGEMENT AGENCY

OVERVIEW & CONCURRENCE FORM

O.M.B No. 1660-0016
Expires: 12/31/2010

PAPERWORK BURDEN DISCLOSURE NOTICE

Public reporting burden for this form is estimated to average 1 hour per response. The burden estimate includes the time for reviewing instructions, searching existing data sources, gathering and maintaining the needed data, and completing, reviewing, and submitting the form. You are not required to respond to this collection of information unless a valid OMB control number appears in the upper right corner of this form. Send comments regarding the accuracy of the burden estimate and any suggestions for reducing this burden to: Information Collections Management, U.S. Department of Homeland Security, Federal Emergency Management Agency, 500 C Street, SW, Washington DC 20472, Paperwork Reduction Project (1660-0016). Submission of the form is required to obtain or retain benefits under the National Flood Insurance Program. **Please do not send your completed survey to the above address.**

A. REQUESTED RESPONSE FROM DHS-FEMA

This request is for a (check one):

☐ CLOMR: A letter from DHS-FEMA commenting on whether a proposed project, if built as proposed, would justify a map revision, or proposed hydrology changes (See 44 CFR Ch. 1, Parts 60, 65 & 72).

☒ LOMR: A letter from DHS-FEMA officially revising the current NFIP map to show the changes to floodplains, regulatory floodway or flood elevations. (See 44 CFR Ch. 1, Parts 60, 65 & 72)

B. OVERVIEW

1. The NFIP map panel(s) affected for all impacted communities is (are):

Community No.	Community Name	State	Map No.	Panel No.	Effective Date
Ex: 480301	City of Katy	TX	480301	0005D	02/08/83
480287	Harris County	TX	48201C	0220G	09/28/90
060344	City of Milpitas, California	CA	06085C	0058H	05/18/09

2. a. Flooding Source: Lower Penitencia Creek

   b. Types of Flooding: ☒ Riverine ☐ Coastal ☒ Shallow Flooding (e.g., Zones AO and AH)

   ☐ Alluvial fan ☐ Lakes ☐ Other (Attach Description)

3. Project Name/Identifier: Recertification of Provisionally Accredited Levee P52

4. FEMA zone designations affected: A, AH (choices: A, AH, AO, A1-A30, A99, AE, AR, V, V1-V30, VE, B, C, D, X)

5. Basis for Request and Type of Revision:

   a. The basis for this revision request is (check all that apply)

   ☐ Physical Change ☐ Improved Methodology/Data ☐ Regulatory Floodway Revision ☐ Base Map Changes

   ☐ Coastal Analysis ☐ Hydraulic Analysis ☐ Hydrologic Analysis ☐ Corrections

   ☐ Weir-Dam Changes ☒ Levee Certification ☐ Alluvial Fan Analysis ☐ Natural Changes

   ☐ New Topographic Data ☐ Other (Attach Description)

   Note: A photograph and narrative description of the area of concern is not required, but is very helpful during review.

   b. The area of revision encompasses the following structures (check all that apply)

   Structures: ☐ Channelization ☒ Levee/Floodwall ☒ Bridge/Culvert

   ☐ Dam ☐ Fill ☐ Other (Attach Description)

C. REVIEW FEE

Has the review fee for the appropriate request category been included? ☐ Yes Fee amount: $_____

☒ No, Attach Explanation

Please see the DHS-FEMA Web site at http://www.fema.gov/plan/prevent/fhm/frm_fees.shtm **for Fee Amounts and Exemptions.**

D. SIGNATURE

All documents submitted in support of this request are correct to the best of my knowledge. I understand that any false statement may be punishable by fine or imprisonment under Title 18 of the United States Code, Section 1001.

Name: Liang Lee	Company: Santa Clara Valley Water District	
Mailing Address: 5750 Almaden Expressway San Jose, CA 95118-3614	Daytime Telephone No.: (408) 265-2607 Ext 2927	Fax No.: (408) 978-0156
	E-Mail Address: llee@valleywater.org	
Signature of Requester (required): C. Liang Lee	Date: 7/16/09	

As the community official responsible for floodplain management, I hereby acknowledge that we have received and reviewed this Letter of Map Revision (LOMR) or conditional LOMR request. Based upon the community's review, we find the completed or proposed project meets or is designed to meet all of the community floodplain management requirements, including the requirement that no fill be placed in the regulatory floodway, and that all necessary Federal, State, and local permits have been, or in the case of a conditional LOMR, will be obtained. In addition, we have determined that the land and any existing or proposed structures to be removed from the SFHA are or will be reasonably safe from flooding as defined in 44CFR 65.2(c), and that we have available upon request by FEMA, all analyses and documentation used to make this determination.

Community Official's Name and Title: Fernando G. Bravo, P.E., Principal Civil Engineer	Community Name: City of Milpitas, CA	
Mailing Address: 455 E. Calaveras Blvd Milpitas, CA 95035-5411	Daytime Telephone No.: (408) 586-3328	Fax No.: (408) 586-3305
	E-Mail Address: fbravo@ci.milpitas.ca.gov	
Community Official's Signature (required):	Date: 7/22/09	

CERTIFICATION BY REGISTERED PROFESSIONAL ENGINEER AND/OR LAND SURVEYOR

This certification is to be signed and sealed by a licensed land surveyor, registered professional engineer, or architect authorized by law to certify elevation information data, hydrologic and hydraulic analysis, and any other supporting information as per NFIP regulations paragraph 65.2(b) and as described in the MT-2 Forms Instructions. All documents submitted in support of this request are correct to the best of my knowledge. I understand that any false statement may be punishable by fine or imprisonment under Title 18 of the United States Code, Section 1001.

Certifier's Name: Charles D. Anderson, P.E.	License No.: CA C43776	Expiration Date: 6/30/11
Company Name: Schaaf & Wheeler, Consulting Civil Engineers	Telephone No.: (408) 246-4848	Fax No.: (408) 246-5624
Signature: Charles D Anderson		Date: 7/07/09

Ensure the forms that are appropriate to your revision request are included in your submittal.

Form Name and (Number)	Required if ...
☒ Riverine Hydrology and Hydraulics Form (Form 2)	New or revised discharges or water-surface elevations
☒ Riverine Structures Form (Form 3)	Channel is modified, addition/revision of bridge/culverts, addition/revision of levee/floodwall, addition/revision of dam
☐ Coastal Analysis Form (Form 4)	New or revised coastal elevations
☐ Coastal Structures Form (Form 5)	Addition/revision of coastal structure
☐ Alluvial Fan Flooding Form (Form 6)	Flood control measures on alluvial fans

REGISTERED PROFESSIONAL ENGINEER CHARLES D. ANDERSON No. 43776 EXP. 6/30/11 CIVIL STATE OF CALIFORNIA

Charles D Anderson

Seal (Optional)

U.S. DEPARTMENT OF HOMELAND SECURITY - FEDERAL EMERGENCY MANAGEMENT AGENCY

RIVERINE HYDROLOGY & HYDRAULICS FORM

O.M.B No. 1660-0016
Expires: 12/31/2010

PAPERWORK REDUCTION ACT

Public reporting burden for this form is estimated to average 3.25 hours per response. The burden estimate includes the time for reviewing instructions, searching existing data sources, gathering and maintaining the needed data, and completing, reviewing, and submitting the form. You are not required to respond to this collection of information unless a valid OMB control number appears in the upper right corner of this form. Send comments regarding the accuracy of the burden estimate and any suggestions for reducing this burden to: Information Collections Management, U.S. Department of Homeland Security, Federal Emergency Management Agency, 500 C Street, SW, Washington DC 20472, Paperwork Reduction Project (1660-0016). Submission of the form is required to obtain or retain benefits under the National Flood Insurance Program. **Please do not send your completed survey to the above address.**

Flooding Source: Lower Penitencia Creek
Note: Fill out one form for each flooding source studied

A. HYDROLOGY

1. Reason for New Hydrologic Analysis (check all that apply)

☒ Not revised (skip to section B) ☐ No existing analysis ☐ Improved data
☐ Alternative methodology ☐ Proposed Conditions (CLOMR) ☐ Changed physical condition of watershed

2. Comparison of Representative 1%-Annual-Chance Discharges

Location	Drainage Area (Sq. Mi.)	Effective/FIS (cfs)	Revised (cfs)

3. Methodology for New Hydrologic Analysis (check all that apply)

☐ Statistical Analysis of Gage Records ☐ Precipitation/Runoff Model
☐ Regional Regression Equations ☐ Other (please attach description)

Please enclose all relevant models in digital format, maps, computations (including computation of parameters) and documentation to support the new analysis.

4. Review/Approval of Analysis

If your community requires a regional, state, or federal agency to review the hydrologic analysis, please attach evidence of approval/review.

5. Impacts of Sediment Transport on Hydrology

Was sediment transport considered? ☐ Yes ☐ No If yes, then fill out Section F (Sediment Transport) of Form 3. If No, then attach your explanation for why sediment transport was not considered.

B. HYDRAULICS

1. Reach to be Revised

	Description	Cross Section	Water-Surface Elevations (ft.) Effective	Proposed/Revised
Downstream Limit	Coyote Creek	186	10.28 feet NAVD	10.28 feet NAVD
Upstream Limit	Beryessa Creek	4640	14.0 feet NAVD	16.51 feet NAVD

Note: "Revised" WSEL based on discharge greater than published

2. Hydraulic Method/Model Used

HEC-RAS.

B. HYDRAULICS (CONTINUED)

3. Pre-Submittal Review of Hydraulic Models

DHS-FEMA has developed two review programs, CHECK-2 and CHECK-RAS, to aid in the review of HEC-2 and HEC-RAS hydraulic models, respectively. These review programs may help verify that the hydraulic estimates and assumptions in the model data are in accordance with NFIP requirements, and that the data are comparable with the assumptions and limitations of HEC-2/HEC-RAS. CHECK-2 and CHECK-RAS identify areas of potential error or concern. **These tools do not replace engineering judgment.** CHECK-2 and CHECK-RAS can be downloaded from http://www.fema.gov/plan/prevent/fhm/frm_soft.shtm. We recommend that you review your HEC-2 and HEC-RAS models with CHECK-2 and CHECK-RAS. Review of your submittal and resolution of valid modeling discrepancies may result in reduced review time.

4.

Models Submitted	Natural Run		Floodway Run		Datum
Duplicate Effective Model*	File Name: N/A	Plan Name:	File Name: N/A	Plan Name:	_____
Corrected Effective Model*	File Name: N/A	Plan Name:	File Name: N/A	Plan Name:	_____
Existing or Pre-Project Conditions Model	File Name: LowerPen	Plan Name: FEMA	File Name: N/A	Plan Name:	NAVD
Revised or Post-Project Conditions Model	File Name: N/A	Plan Name:	File Name: N/A	Plan Name:	_____
Other - (attach description)	File Name:	Plan Name:	File Name: N/A	Plan Name:	_____

* For details, refer to the corresponding section of the instructions.

☒ Digital Models Submitted? (Required)

C. MAPPING REQUIREMENTS

A **certified topographic map** must be submitted showing the following information (where applicable): the boundaries of the effective, existing, and proposed conditions 1%-annual-chance floodplain (for approximate Zone A revisions) or the boundaries of the 1%- and 0.2%-annual-chance floodplains and regulatory floodway (for detailed Zone AE, AO, and AH revisions); location and alignment of all cross sections with stationing control indicated; stream, road, and other alignments (e.g., dams, levees, etc.); current community easements and boundaries; boundaries of the requester's property; certification of a registered professional engineer registered in the subject State; location and description of reference marks; and the referenced vertical datum (NGVD, NAVD, etc.).

☐ Digital Mapping (GIS/CADD) Data Submitted

Note that the boundaries of the existing or proposed conditions floodplains and regulatory floodway to be shown on the revised FIRM and/or FBFM must tie-in with the effective floodplain and regulatory floodway boundaries. Please attach **a copy of the effective FIRM and/or FBFM,** annotated to show the boundaries of the revised 1%- and 0.2%-annual-chance floodplains and regulatory floodway that tie-in with the boundaries of the effective 1%- and 0.2%-annual-chance floodplain and regulatory floodway at the upstream and downstream limits of the area of revision.

☒ Annotated FIRM and/or FBFM (Required)

D. COMMON REGULATORY REQUIREMENTS*

1. For LOMR/CLOMR requests, do Base Flood Elevations (BFEs) increase? ☐ Yes ☒ No

   a. For CLOMR requests, if either of the following is true, please submit **evidence of compliance with Section 65.12 of the NFIP regulations**:
      - The proposed project encroaches upon a regulatory floodway and would result in increases above 0.00 foot.
      - The proposed project encroaches upon a SFHA with or without BFEs established and would result in increases above 1.00 foot.

   b. For LOMR requests, does this request require property owner notification and acceptance of BFE increases? ☐ Yes ☒ No
      If Yes, please attach **proof of property owner notification and acceptance (if available)**. Elements of and examples of property owner notification can be found in the MT-2 Form 2 Instructions.

2. Does the request involve the placement or proposed placement of fill? ☐ Yes ☒ No

   If Yes, the community must be able to certify that the area to be removed from the special flood hazard area, to include any structures or proposed structures, meets all of the standards of the local floodplain ordinances, and is reasonably safe from flooding in accordance with the NFIP regulations set forth at 44 CFR 60.3(a)(3), 65.5(a)(4), and 65.6(a)(14). Please see the MT-2 instructions for more information.

3. For LOMR requests, is the regulatory floodway being revised? ☐ Yes ☒ No

   If Yes, attach **evidence of regulatory floodway revision notification**. As per Paragraph 65.7(b)(1) of the NFIP Regulations, notification is required for requests involving revisions to the regulatory floodway. (Not required for revisions to approximate 1%-annual-chance floodplains [studied Zone A designation] unless a regulatory floodway is being added. Elements and examples of regulatory floodway revision notification can be found in the MT-2 Form 2 Instructions.)

4. For LOMR/CLOMR requests, does this request have the potential to impact an endangered species? ☐ Yes ☒ No

   If Yes, please submit documentation to the community to show that you have complied with Sections 9 and 10 of the Endangered Species Act (ESA). Section 9 of the ESA prohibits anyone from "taking" or harming an endangered species. If an action might harm an endangered species, a permit is required from U.S. Fish and Wildlife Service or National Marine Fisheries Service under Section 10 of the ESA.

   For actions authorized, funded, or being carried out by Federal or State agencies, please submit documentation from the agency showing its compliance with Section 7(a)(2) of the ESA.

* Not inclusive of all applicable regulatory requirements. For details, see 44 CFR parts 60 and 65.

U.S. DEPARTMENT OF HOMELAND SECURITY - FEDERAL EMERGENCY MANAGEMENT AGENCY

RIVERINE STRUCTURES FORM

O.M.B No. 1660-0016
Expires: 12/31/2010

PAPERWORK REDUCTION ACT

Public reporting burden for this form is estimated to average 7 hours per response. The burden estimate includes the time for reviewing instructions, searching existing data sources, gathering and maintaining the needed data, and completing, reviewing, and submitting the form. You are not required to respond to this collection of information unless a valid OMB control number appears in the upper right corner of this form. Send comments regarding the accuracy of the burden estimate and any suggestions for reducing this burden to: Information Collections Management, U.S. Department of Homeland Security, Federal Emergency Management Agency, 500 C Street, SW, Washington DC 20472, Paperwork Reduction Project (1660-0016). Submission of the form is required to obtain or retain benefits under the National Flood Insurance Program. **Please do not send your completed survey to the above address.**

Flooding Source: Lower Penitencia Creek
Note: Fill out one form for each flooding source studied

A. GENERAL

Complete the appropriate section(s) for each Structure listed below:

Channelization ..... complete Section B
Bridge/Culvert ..... complete Section C
Dam/Basin ..... complete Section D
Levee/Floodwall ..... complete Section E
Sediment Transport..... complete Section F (if required)

Description Of Structure

1. **Name of Structure: Interstate 880**

   Type (check one): ☐ Channelization ☒ Bridge/Culvert ☐ Levee/Floodwall ☐ Dam/Basin

   Location of Structure: 700 feet upstream confluence with Coyote Creek

   Downstream Limit/Cross Section: 428

   Upstream Limit/Cross Section: 768

2. **Name of Structure: California Circle**

   Type (check one): ☐ Channelization ☒ Bridge/Culvert ☐ Levee/Floodwall ☐ Dam/Basin

   Location of Structure: 1180 feet upstream confluence with Coyote Creek

   Downstream Limit/Cross Section: 1130

   Upstream Limit/Cross Section: 1223

3. **Name of Structure: Provisionally Accredited Levee P52**

   Type (check one) ☐ Channelization ☐ Bridge/Culvert ☒ Levee/Floodwall ☐ Dam/Basin

   Location of Structure: East Bank of Lower Penitencia Creek

   Downstream Limit/Cross Section: 1223

   Upstream Limit/Cross Section: 4640

NOTE: For more structures, attach additional pages as needed.

U.S. DEPARTMENT OF HOMELAND SECURITY - FEDERAL EMERGENCY MANAGEMENT AGENCY

RIVERINE STRUCTURES FORM

O.M.B No. 1660-0016
Expires: 12/31/2010

PAPERWORK REDUCTION ACT

Public reporting burden for this form is estimated to average 7 hours per response. The burden estimate includes the time for reviewing instructions, searching existing data sources, gathering and maintaining the needed data, and completing, reviewing, and submitting the form. You are not required to respond to this collection of information unless a valid OMB control number appears in the upper right corner of this form. Send comments regarding the accuracy of the burden estimate and any suggestions for reducing this burden to: Information Collections Management, U.S. Department of Homeland Security, Federal Emergency Management Agency, 500 C Street, SW, Washington DC 20472, Paperwork Reduction Project (1660-0016). Submission of the form is required to obtain or retain benefits under the National Flood Insurance Program. **Please do not send your completed survey to the above address.**

Flooding Source: Lower Penitencia Creek
Note: Fill out one form for each flooding source studied

A. GENERAL

Complete the appropriate section(s) for each Structure listed below:

Channelization ..... complete Section B
Bridge/Culvert ..... complete Section C
Dam/Basin ..... complete Section D
Levee/Floodwall ..... complete Section E
Sediment Transport..... complete Section F (if required)

Description Of Structure

1. Name of Structure: Milmont Drive

Type (check one): ☐ Channelization ☒ Bridge/Culvert ☐ Levee/Floodwall ☐ Dam/Basin

Location of Structure: 4142 feet upstream confluence with Coyote Creek

Downstream Limit/Cross Section: 4104

Upstream Limit/Cross Section: 4175

2. Name of Structure:

Type (check one): ☐ Channelization ☐ Bridge/Culvert ☐ Levee/Floodwall ☐ Dam/Basin

Location of Structure:

Downstream Limit/Cross Section:

Upstream Limit/Cross Section:

3. Name of Structure:

Type (check one) ☐ Channelization ☐ Bridge/Culvert ☐ Levee/Floodwall ☐ Dam/Basin

Location of Structure:

Downstream Limit/Cross Section:

Upstream Limit/Cross Section:

NOTE: For more structures, attach additional pages as needed.

B. CHANNELIZATION

Flooding Source:

Name of Structure:

1. Accessory Structures

The channelization includes (check one):

- ☐ Levees [Attach Section E (Levee/Floodwall)]
- ☐ Superelevated sections
- ☐ Debris basin/detention basin [Attach Section D (Dam/Basin)]
- ☐ Other (Describe):
- ☐ Drop structures
- ☐ Transitions in cross sectional geometry
- ☐ Energy dissipator

2. Drawing Checklist

Attach the plans of the channelization certified by a registered professional engineer, as described in the instructions.

3. Hydraulic Considerations

The channel was designed to carry (cfs) and/or the -year flood.

The design elevation in the channel is based on (check one):

☐ Subcritical flow ☐ Critical flow ☐ Supercritical flow ☐ Energy grade line

If there is the potential for a hydraulic jump at the following locations, check all that apply and attach an explanation of how the hydraulic jump is controlled without affecting the stability of the channel.

☐ Inlet to channel ☐ Outlet of channel ☐ At Drop Structures ☐ At Transitions
☐ Other locations (specify):

4. Sediment Transport Considerations

Was sediment transport considered? ☐ Yes ☐ No If Yes, then fill out Section F (Sediment Transport).
If No, then attach your explanation for why sediment transport was not considered.

C. BRIDGE/CULVERT

Flooding Source: Lower Penitencia Creek

Name of Structure: Interstate 880 Bridge Including On-Ramp

1. This revision reflects (check one):

☐ Bridge/culvert not modeled in the FIS
☒ Modified bridge/culvert previously modeled in the FIS
☐ Revised analysis of bridge/culvert previously modeled in the FIS

2. Hydraulic model used to analyze the structure (e.g., HEC-2 with special bridge routine, WSPRO, HY8): HEC-RAS
If different than hydraulic analysis for the flooding source, justify why the hydraulic analysis used for the flooding source could not analyze the structures. Attach justification.

3. Attach plans of the structures certified by a registered professional engineer. The plan detail and information should include the following (check the information that has been provided):

- ☒ Dimensions (height, width, span, radius, length)
- ☐ Shape (culverts only)
- ☒ Material
- ☒ Beveling or Rounding
- ☒ Wing Wall Angle
- ☒ Skew Angle
- ☒ Distances Between Cross Sections
- ☒ Erosion Protection
- ☒ Low Chord Elevations – Upstream and Downstream
- ☒ Top of Road Elevations – Upstream and Downstream
- ☒ Structure Invert Elevations – Upstream and Downstream
- ☒ Stream Invert Elevations – Upstream and Downstream
- ☒ Cross-Section Locations

4. Sediment Transport Considerations

Was sediment transport considered? ☐ Yes ☒ No If yes, then fill out Section F (Sediment Transport).
If No, then attach your explanation for why sediment transport was not considered. See Tab 7

B. CHANNELIZATION

Flooding Source:

Name of Structure:

1. Accessory Structures

The channelization includes (check one):

☐ Levees [Attach Section E (Levee/Floodwall)]
☐ Superelevated sections
☐ Debris basin/detention basin [Attach Section D (Dam/Basin)]
☐ Other (Describe):
☐ Drop structures
☐ Transitions in cross sectional geometry
☐ Energy dissipator

2. Drawing Checklist

Attach the plans of the channelization certified by a registered professional engineer, as described in the instructions.

3. Hydraulic Considerations

The channel was designed to carry (cfs) and/or the -year flood.

The design elevation in the channel is based on (check one):

☐ Subcritical flow ☐ Critical flow ☐ Supercritical flow ☐ Energy grade line

If there is the potential for a hydraulic jump at the following locations, check all that apply and attach an explanation of how the hydraulic jump is controlled without affecting the stability of the channel.

☐ Inlet to channel ☐ Outlet of channel ☐ At Drop Structures ☐ At Transitions
☐ Other locations (specify):

4. Sediment Transport Considerations

Was sediment transport considered? ☐ Yes ☐ No If Yes, then fill out Section F (Sediment Transport).
If No, then attach your explanation for why sediment transport was not considered.

C. BRIDGE/CULVERT

Flooding Source: Lower Penitencia Creek

Name of Structure: California Circle Bridge

1. This revision reflects (check one):

☒ Bridge/culvert not modeled in the FIS
☐ Modified bridge/culvert previously modeled in the FIS
☐ Revised analysis of bridge/culvert previously modeled in the FIS

2. Hydraulic model used to analyze the structure (e.g., HEC-2 with special bridge routine, WSPRO, HY8): HEC-RAS
If different than hydraulic analysis for the flooding source, justify why the hydraulic analysis used for the flooding source could not analyze the structures. Attach justification.

3. Attach plans of the structures certified by a registered professional engineer. The plan detail and information should include the following (check the information that has been provided):

☒ Dimensions (height, width, span, radius, length)
☐ Shape (culverts only)
☒ Material
☒ Beveling or Rounding
☒ Wing Wall Angle
☒ Skew Angle
☒ Distances Between Cross Sections
☒ Erosion Protection
☒ Low Chord Elevations – Upstream and Downstream
☒ Top of Road Elevations – Upstream and Downstream
☒ Structure Invert Elevations – Upstream and Downstream
☒ Stream Invert Elevations – Upstream and Downstream
☒ Cross-Section Locations

4. Sediment Transport Considerations

Was sediment transport considered? ☐ Yes ☒ No If yes, then fill out Section F (Sediment Transport).
If No, then attach your explanation for why sediment transport was not considered. See Tab 7

B. CHANNELIZATION

Flooding Source:

Name of Structure:

1. Accessory Structures

The channelization includes (check one):

- ☐ Levees [Attach Section E (Levee/Floodwall)]
- ☐ Superelevated sections
- ☐ Debris basin/detention basin [Attach Section D (Dam/Basin)]
- ☐ Other (Describe):
- ☐ Drop structures
- ☐ Transitions in cross sectional geometry
- ☐ Energy dissipator

2. Drawing Checklist

Attach the plans of the channelization certified by a registered professional engineer, as described in the instructions.

3. Hydraulic Considerations

The channel was designed to carry (cfs) and/or the -year flood.

The design elevation in the channel is based on (check one):

☐ Subcritical flow ☐ Critical flow ☐ Supercritical flow ☐ Energy grade line

If there is the potential for a hydraulic jump at the following locations, check all that apply and attach an explanation of how the hydraulic jump is controlled without affecting the stability of the channel.

☐ Inlet to channel ☐ Outlet of channel ☐ At Drop Structures ☐ At Transitions
☐ Other locations (specify):

4. Sediment Transport Considerations

Was sediment transport considered? ☐ Yes ☐ No If Yes, then fill out Section F (Sediment Transport).
If No, then attach your explanation for why sediment transport was not considered.

C. BRIDGE/CULVERT

Flooding Source: Lower Penitencia Creek

Name of Structure: Milmont Drive Bridge

1. This revision reflects (check one):

☒ Bridge/culvert not modeled in the FIS
☐ Modified bridge/culvert previously modeled in the FIS
☐ Revised analysis of bridge/culvert previously modeled in the FIS

2. Hydraulic model used to analyze the structure (e.g., HEC-2 with special bridge routine, WSPRO, HY8): HEC-RAS
If different than hydraulic analysis for the flooding source, justify why the hydraulic analysis used for the flooding source could not analyze the structures. Attach justification.

3. Attach plans of the structures certified by a registered professional engineer. The plan detail and information should include the following (check the information that has been provided):

- ☒ Dimensions (height, width, span, radius, length)
- ☐ Shape (culverts only)
- ☒ Material
- ☒ Beveling or Rounding
- ☒ Wing Wall Angle
- ☒ Skew Angle
- ☒ Distances Between Cross Sections
- ☒ Erosion Protection
- ☒ Low Chord Elevations – Upstream and Downstream
- ☒ Top of Road Elevations – Upstream and Downstream
- ☒ Structure Invert Elevations – Upstream and Downstream
- ☒ Stream Invert Elevations – Upstream and Downstream
- ☒ Cross-Section Locations

4. Sediment Transport Considerations

Was sediment transport considered? ☐ Yes ☒ No If yes, then fill out Section F (Sediment Transport).
If No, then attach your explanation for why sediment transport was not considered. See Tab 7

D. DAM/BASIN

Flooding Source:

Name of Structure:

1. This request is for (check one): ☐ Existing dam ☐ New dam ☐ Modification of existing dam

2. The dam was designed by (check one): ☐ Federal agency ☐ State agency ☐ Local government agency ☐ Private organization

   Name of the agency or organization:

3. The Dam was permitted as (check one):

   a. ☐ Federal Dam ☐ State Dam

      Provide the permit or identification number (ID) for the dam and the appropriate permitting agency or organization

      Permit or ID number Permitting Agency or Organization

   b. ☐ Local Government Dam ☐ Private Dam

      Provided related drawings, specification and supporting design information.

4. Does the project involve revised hydrology? ☐ Yes ☐ No

   If Yes, complete the Riverine Hydrology & Hydraulics Form (Form 2).

   Was the dam/basin designed using critical duration storm?

   ☐ Yes, provide supporting documentation with your completed Form 2.

   ☐ No, provide a written explanation and justification for not using the critical duration storm.

5. Does the submittal include debris/sediment yield analysis? ☐ Yes ☐ No

   If yes, then fill out Section F (Sediment Transport).
   If No, then attach your explanation for why debris/sediment analysis was not considered.

6. Does the Base Flood Elevation behind the dam or downstream of the dam change?

   ☐ Yes ☐ No If Yes, complete the Riverine Hydrology & Hydraulics Form (Form 2) and complete the table below.

   Stillwater Elevation Behind the Dam

FREQUENCY (% annual chance)	FIS	REVISED
10-year (10%)		
50-year (2%)		
100-year (1%)		
500-year (0.2%)		
Normal Pool Elevation		

7. Please attach a copy of the formal Operation and Maintenance Plan

E. LEVEE/FLOODWALL

1. System Elements

a. This Levee/Floodwall analysis is based on (check one):

☐ upgrading of an existing levee/floodwall system
☐ a newly constructed levee/floodwall system
☒ reanalysis of an existing levee/floodwall system

b. Levee elements and locations are (check one):

☒ earthen embankment, dike, berm, etc.	Station 1223 to 4640
☐ structural floodwall	Station to
☐ Other (describe):	Station to

c. Structural Type (check one):

☐ monolithic cast-in place reinforced concrete
☐ reinforced concrete masonry block
☐ sheet piling
☐ Other (describe):

d. Has this levee/floodwall system been certified by a Federal agency to provide protection from the base flood?

☐ Yes ☒ No

If Yes, by which agency?

e. Attach certified drawings containing the following information (indicate drawing sheet numbers):

1. Plan of the levee embankment and floodwall structures.	Sheet Numbers: 4-7
2. A profile of the levee/floodwall system showing the Base Flood Elevation (BFE), levee and/or wall crest and foundation, and closure locations for the total levee system.	Sheet Numbers: 4-7
3. A profile of the BFE, closure opening outlet and inlet invert elevations, type and size of opening, and kind of closure.	Sheet Numbers: n/a
4. A layout detail for the embankment protection measures.	Sheet Numbers: 2-3
5. Location, layout, and size and shape of the levee embankment features, foundation treatment, floodwall structure, closure structures, and pump stations.	Sheet Numbers: 8-11

2. Freeboard

a. The minimum freeboard provided above the BFE is:

Riverine

3.0 feet or more at the downstream end and throughout	☒ Yes	☐ No
3.5 feet or more at the upstream end	☒ Yes	☐ No
4.0 feet within 100 feet upstream of all structures and/or constrictions	☒ Yes	☐ No

Coastal

1.0 foot above the height of the one percent wave associated with the 1%-annual-chance stillwater surge elevation or maximum wave runup (whichever is greater).	☐ Yes	☐ No
2.0 feet above the 1%-annual-chance stillwater surge elevation	☐ Yes	☐ No

E. LEVEE/FLOODWALL (CONTINUED)

2. Freeboard (continued)

Please note, occasionally exceptions are made to the minimum freeboard requirement. If an exception is requested, attach documentation addressing Paragraph 65.10(b)(1)(ii) of the NFIP Regulations.

If No is answered to any of the above, please attach an explanation.

b. Is there an indication from historical records that ice-jamming can affect the BFE? ☐ Yes ☒ No

If Yes, provide ice-jam analysis profile and evidence that the minimum freeboard discussed above still exists.

3. Closures

a. Openings through the levee system (check one): ☐ exists ☒ does not exist

If opening exists, list all closures:

Channel Station	Left or Right Bank	Opening Type	Highest Elevation for Opening Invert	Type of Closure Device

(Extend table on an added sheet as needed and reference)

Note: Geotechnical and geologic data

In addition to the required detailed analysis reports, data obtained during field and laboratory investigations and used in the design analysis for the following system features should be submitted in a tabulated summary form. (Reference U.S. Army Corps of Engineers [USACE] EM-1110-2-1906 Form 2086.)

4. Embankment Protection

a. The maximum levee slope landside is: 2:1

b. The maximum levee slope floodside is: 2:1

c. The range of velocities along the levee during the base flood is: 0.9 fps (min.) to 3.8 fps (max.)

d. Embankment material is protected by (describe what kind): Vegetation and Some Concrete Lining

e. Riprap Design Parameters (check one): ☐ Velocity ☐ Tractive stress
Attach references

Reach		Sideslope	Flow Depth	Velocity	Curve or Straight	Stone Riprap			Depth of Toedown
						D_{100}	D_{50}	Thickness	
Sta	to								
Sta	to								
Sta	to								
Sta	to								
Sta	to								
Sta	to								

(Extend table on an added sheet as needed and reference each entry)

4. Embankment Protection (continued)

f. Is a bedding/filter analysis and design attached? ☐ Yes ☒ No

g. Describe the analysis used for other kinds of protection used (include copies of the design analysis):

See Chapter 8.1 of enclosed Geotechnical Investigation by AMEC Geomatrix, Inc.

Attach engineering analysis to support construction plans.

5. Embankment And Foundation Stability

a. Identify locations and describe the basis for selection of critical location for analysis:
See Chapter 7 of enclosed Geotechnical Investigation by AMEC Geomatrix, Inc.

☐ Overall height: Sta. ; height ft.

☐ Limiting foundation soil strength:

Sta. , depth to

strength ϕ = degrees, c = psf

slope: SS = (h) to (v)

(Repeat as needed on an added sheet for additional locations)

b. Specify the embankment stability analysis methodology used (e.g., circular arc, sliding block, infinite slope, etc.):

Two-dimensional force and moment limit-equilibrium method (SLOPE/W)

c. Summary of stability analysis results:

Case	Loading Conditions	Critical Safety Factor	Criteria (Min.)
I	End of construction	1.53	1.3
II	Sudden drawdown	1.23	1.0
III	Critical flood stage	2.84	1.4
IV	Steady seepage at flood stage	2.84	1.4
VI	Earthquake (Case I)	1.11	1.0

(Reference: USACE EM-1110-2-1913 Table 6-1)

d. Was a seepage analysis for the embankment performed? ☒ Yes ☐ No

If Yes, describe methodology used: Two-dimensional finite element (SEEP/W)

e. Was a seepage analysis for the foundation performed? ☒ Yes ☐ No

f. Were uplift pressures at the embankment landside toe checked? ☒ Yes ☐ No

g. Were seepage exit gradients checked for piping potential? ☒ Yes ☐ No

h. The duration of the base flood hydrograph against the embankment is 6 - 12 hours.

Attach engineering analysis to support construction plans.

E. LEVEE/FLOODWALL (CONTINUED)

6. Floodwall And Foundation Stability

a. Describe analysis submittal based on Code (check one):

☐ UBC (1988) or ☐ Other (specify):

b. Stability analysis submitted provides for:

☐ Overturning ☐ Sliding If not, explain:

c. Loading included in the analyses were:

☐ Lateral earth @ P_A = psf; P_p = psf

☐ Surcharge-Slope @ , ☐ surface psf

☐ Wind @ P_w = psf

☐ Seepage (Uplift); ☐ Earthquake @ P_{eq} = %g

☐ 1%-annual-chance significant wave height: ft.

☐ 1%-annual-chance significant wave period: sec.

d. Summary of Stability Analysis Results: Factors of Safety.

Itemize for each range in site layout dimension and loading condition limitation for each respective reach.

Loading Condition	Criteria (Min)		Sta	To	Sta	To
	Overturn	Sliding	Overturn	Sliding	Overturn	Sliding
Dead & Wind	1.5	1.5				
Dead & Soil	1.5	1.5				
Dead, Soil, Flood, & Impact	1.5	1.5				
Dead, Soil, & Seismic	1.3	1.3				

(Ref: FEMA 114 Sept 1986; USACE EM 1110-2-2502)

(Note: Extend table on an added sheet as needed and reference)

e. Foundation bearing strength for each soil type:

Bearing Pressure	Sustained Load (psf)	Short Term Load (psf)
Computed design maximum		
Maximum allowable		

f. Foundation scour protection ☐ is, ☐ is not provided. If provided, attach explanation and supporting documentation:

Attach engineering analysis to support construction plans.

E. LEVEE/FLOODWALL (CONTINUED)

7. Settlement

a. Has anticipated potential settlement been determined and incorporated into the specified construction elevations to maintain the established freeboard margin? ☒ Yes ☐ No

b. The computed range of settlement is 0.08 ft. to 0.33 ft.

c. Settlement of the levee crest is determined to be primarily from :

☐ Foundation consolidation
☐ Embankment compression
☒ Other (Describe): Seismic Settlement

d. Differential settlement of floodwalls ☐ has ☐ has not been accommodated in the structural design and construction.

Attach engineering analysis to support construction plans.

8. Interior Drainage

a. Specify size of each interior watershed:

Draining to pressure conduit: 430 acres
Draining to ponding area: 430 acres

b. Relationships Established

Ponding elevation vs. storage	☒ Yes	☐ No
Ponding elevation vs. gravity flow	☐ Yes	☒ No
Differential head vs. gravity flow	☐ Yes	☒ No

c. The river flow duration curve is enclosed: ☐ Yes ☒ No

d. Specify the discharge capacity of the head pressure conduit: 143 cfs

e. Which flooding conditions were analyzed?

• Gravity flow (Interior Watershed)	☒ Yes	☐ No
• Common storm (River Watershed)	☒ Yes	☐ No
• Historical ponding probability	☐ Yes	☒ No
• Coastal wave overtopping	☐ Yes	☒ No

If No for any of the above, attach explanation. See Tab 8

f. Interior drainage has been analyzed based on joint probability of interior and exterior flooding and the capacities of pumping and outlet facilities to provide the established level of flood protection. ☒ Yes ☐ No

If No, attach explanation.

g. The rate of seepage through the levee system for the base flood is 0 cfs

h. The length of levee system used to drive this seepage rate in item g: ft.

E. LEVEE/FLOODWALL (CONTINUED)

8. Interior Drainage (continued)

i. Will pumping plants be used for interior drainage? ☒ Yes ☐ No

If Yes, include the number of pumping plants: 1
For each pumping plant, list:

	Plant #1	Plant #2
The number of pumps	5	
The ponding storage capacity	28 ac-ft	
The maximum pumping rate	150 cfs	
The maximum pumping head	10.2 feet	
The pumping starting elevation	5.0 feet NAVD	
The pumping stopping elevation	0.0 feet NAVD	
Is the discharge facility protected?	Yes	
Is there a flood warning plan?	No	No
How much time is available between warning and flooding?		

Will the operation be automatic? ☒ Yes ☐ No

If the pumps are electric, are there backup power sources? ☒ Yes ☐ No

(Reference: USACE EM-1110-2-3101, 3102, 3103, 3104, and 3105)

Include a copy of supporting documentation of data and analysis. Provide a map showing the flooded area and maximum ponding elevations for all interior watersheds that result in flooding.

9. Other Design Criteria

a. The following items have been addressed as stated:

Liquefaction ☐ is ☒ is not a problem
Hydrocompaction ☐ is ☒ is not a problem
Heave differential movement due to soils of high shrink/swell ☐ is ☒ is not a problem

b. For each of these problems, state the basic facts and corrective action taken:

Attach supporting documentation

c. If the levee/floodwall is new or enlarged, will the structure adversely impact flood levels and/or flow velocities floodside of the structure?
☐ Yes ☐ No

Attach supporting documentation

d. Sediment Transport Considerations:

Was sediment transport considered? ☐ Yes ☒ No If Yes, then fill out Section F (Sediment Transport).
If No, then attach your explanation for why sediment transport was not considered. See Tab 7

E. LEVEE/FLOODWALL (CONTINUED)

10. Operational Plan And Criteria

    a. Are the planned/installed works in full compliance with Part 65.10 of the NFIP Regulations? ☒ Yes ☐ No

    b. Does the operation plan incorporate all the provisions for closure devices as required in Paragraph 65.10(c)(1) of the NFIP regulations?
    ☒ Yes ☐ No

    c. Does the operation plan incorporate all the provisions for interior drainage as required in Paragraph 65.10(c)(2) of the NFIP regulations?
    ☒ Yes ☐ No

    If the answer is No to any of the above, please attach supporting documentation.

11. Maintenance Plan

    a. Are the planned/installed works in full compliance with Part 65.10 of the NFIP Regulations? ☒ Yes ☐ No
    If No, please attach supporting documentation.

12. Operations and Maintenance Plan

    Please attach a copy of the formal Operations and Maintenance Plan for the levee/floodwall. See Tab 9

F. SEDIMENT TRANSPORT

Flooding Source:

Name of Structure:

If there is any indication from historical records that sediment transport (including scour and deposition) can affect the Base Flood Elevation (BFE); and/or based on the stream morphology, vegetative cover, development of the watershed and bank conditions, there is a potential for debris and sediment transport (including scour and deposition) to affect the BFEs, then provide the following information along with the supporting documentation:

Sediment load associated with the base flood discharge: Volume acre-feet

Debris load associated with the base flood discharge: Volume acre-feet

Sediment transport rate (percent concentration by volume)

Method used to estimate sediment transport:

Most sediment transport formulas are intended for a range of hydraulic conditions and sediment sizes; attach a detailed explanation for using the selected method.

Method used to estimate scour and/or deposition:

Method used to revise hydraulic or hydrologic analysis (model) to account for sediment transport:
Please note that bulked flows are used to evaluate the performance of a structure during the base flood; however, FEMA does not map BFEs based on bulked flows.

If a sediment analysis has not been performed, an explanation as to why sediment transport (including scour and deposition) will not affect the BFEs or structures must be provided. See Tab 7

Tab 2

NOTES TO USERS

This map is for use in administering the National Flood Insurance Program. It does not necessarily identify all areas subject to flooding, particularly from local drainage sources of small size. The **community map repository** should be consulted for possible updated or additional flood hazard information.

To obtain more detailed information in areas where **Base Flood Elevations** (BFEs) and/or **floodways** have been determined, users are encouraged to consult the Flood Profiles and Floodway Data and/or Summary of Stillwater Elevations tables contained within the Flood Insurance Study (FIS) report that accompanies this FIRM. Users should be aware that BFEs shown on the FIRM represent rounded whole-foot elevations. These BFEs are intended for flood insurance rating purposes only and should not be used as the sole source of flood elevation information. Accordingly, flood elevation data presented in the FIS report should be utilized in conjunction with the FIRM for purposes of construction and/or floodplain management.

Coastal Base Flood Elevations shown on this map apply only landward of 0.0' North American Vertical Datum of 1988 (NAVD 88). Users of this FIRM should be aware that coastal flood elevations are also provided in the Summary of Stillwater Elevations tables in the Flood Insurance Study report for this jurisdiction. Elevations shown in the Summary of Stillwater Elevations tables should be used for construction and/or floodplain management purposes when they are higher than the elevations shown on this FIRM.

Boundaries of the **floodways** were computed at cross sections and interpolated between cross sections. The floodways were based on hydraulic considerations with regard to requirements of the National Flood Insurance Program. Floodway widths and other pertinent floodway data are provided in the Flood Insurance Study report for this jurisdiction.

Certain areas not in Special Flood Hazard Areas may be protected by **flood control structures**. Refer to Section 2.4 "Flood Protection Measures" of the Flood Insurance Study report for information on flood control structures for this jurisdiction.

The **projection** used in the preparation of this map was Universal Transverse Mercator (UTM) zone 10. The **horizontal datum** was NAD 83, GRS80 spheroid. Differences in datum, spheroid, projection or UTM zones used in the production of FIRMs for adjacent jurisdictions may result in slight positional differences in map features across jurisdiction boundaries. These differences do not affect the accuracy of this FIRM.

Flood elevations on this map are referenced to the North American Vertical Datum of 1988. These flood elevations must be compared to structure and ground elevations referenced to the same **vertical datum**. For information regarding conversion between the National Geodetic Vertical Datum of 1929 and the North American Vertical Datum of 1988, visit the National Geodetic Survey website at http://www.ngs.noaa.gov or contact the National Geodetic Survey at the following address:

NGS Information Services
NOAA, N/NGS12
National Geodetic Survey
SSMC-3, #9202
1315 East-West Highway
Silver Spring, Maryland 20910-3282
(301) 713-3242

To obtain current elevation, description, and/or location information for **bench marks** shown on this map, please contact the Information Services Branch of the National Geodetic Survey at **(301) 713-3242**, or visit its website at http://www.ngs.noaa.gov.

Base map information shown on this FIRM was derived from U.S. Geological Survey Digital Orthophoto Quadrangles produced at a scale of 1:12,000 from photography dated 1992. Additional information was derived from AirPhoto USA Orthophotography produced at a scale of 1:12,000 from photography dated 2002.

This map reflects more detailed and up-to-date **stream channel configurations** than those shown on the previous FIRM for this jurisdiction. The floodplains and floodways that were transferred from the previous FIRM may have been adjusted to conform to these new stream channel configurations. As a result, the Flood Profiles and Floodway Data tables in the Flood Insurance Study Report (which contains authoritative hydraulic data) may reflect stream channel distances that differ from what is shown on this map.

Corporate limits shown on this map are based on the best data available at the time of publication. Because changes due to annexations or de-annexations may have occurred after this map was published, map users should contact appropriate community officials to verify current corporate limit locations.

Please refer to the separately printed **Map Index** for an overview map of the county showing the layout of map panels; community map repository addresses; and a Listing of Communities table containing National Flood Insurance Program dates for each community as well as a listing of the panels on which each community is located.

Contact the **FEMA Map Service Center** at 1-800-358-9616 for information on available products associated with this FIRM. Available products may include previously issued Letters of Map Change, a Flood Insurance Study report, and/or digital versions of this map. The FEMA Map Service Center may also be reached by Fax at 1-800-358-9620 and its website at http://msc.fema.gov.

If you have **questions about this map** or questions concerning the National Flood Insurance Program in general, please call **1-877-FEMA MAP** (1-877-336-2627) or visit the FEMA website at http://www.fema.gov.

WARNING: This levee, dike, or other structure has been provisionally accredited and mapped as providing protection from the 1-percent annual chance flood. To maintain accreditation, the levee owner or community is required to submit documentation necessary to comply with 44 CFR Section 65.10 by (8/01/2009). Because of the risk of overtopping or failure of the structure, communities should take proper precautions to protect lives and minimize damages in these areas, such as issuing an evacuation plan and encouraging property owners to purchase flood insurance.

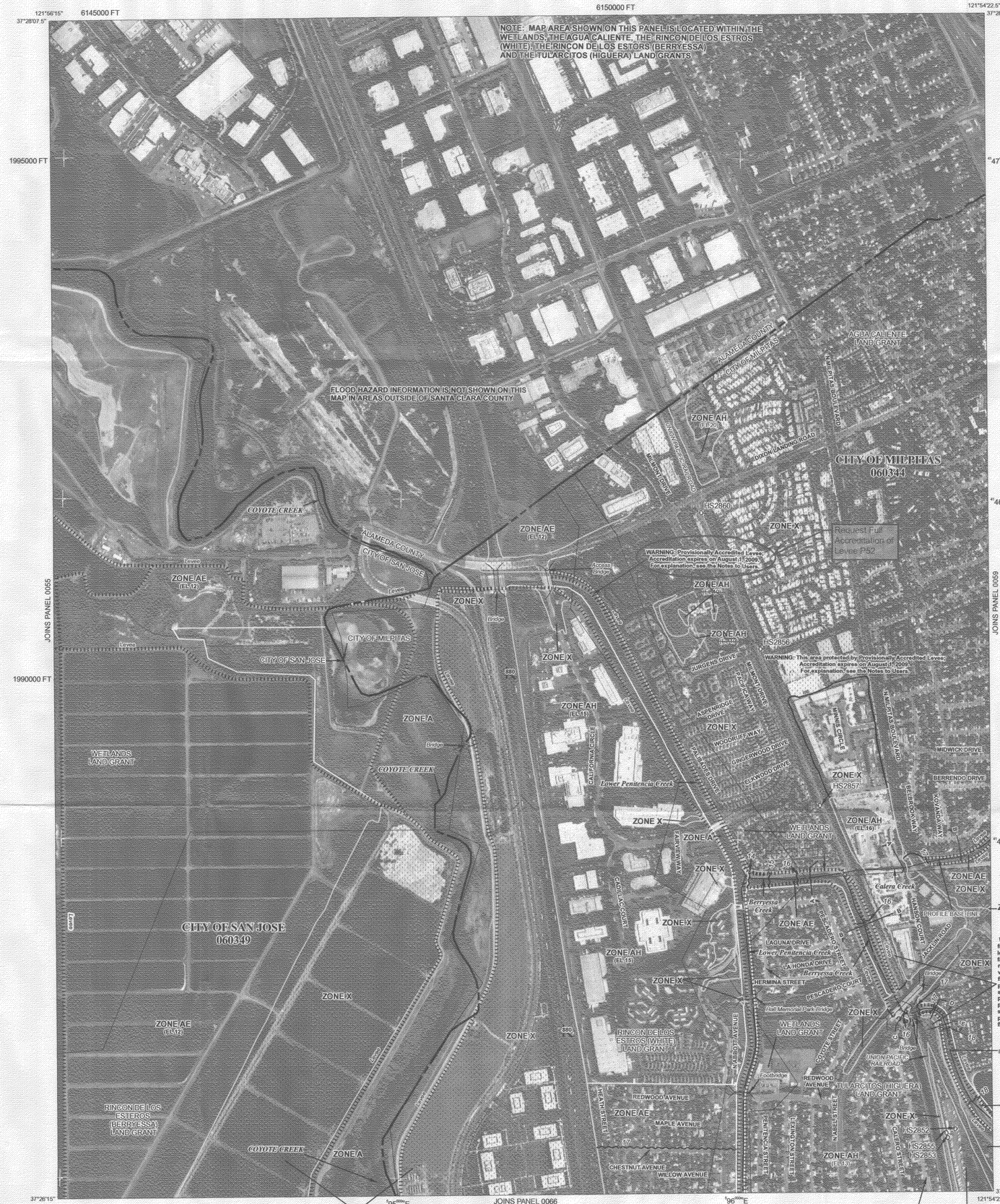

LEGEND

SPECIAL FLOOD HAZARD AREAS SUBJECT TO INUNDATION BY THE 1% ANNUAL CHANCE FLOOD

The 1% annual flood (100-year flood), also known as the base flood, is the flood that has a 1% chance of being equaled or exceeded in any given year. The Special Flood Hazard Area is the area subject to flooding by the 1% annual chance flood. Areas of Special Flood Hazard include Zones A, AE, AH, AO, AR, A99, V, and VE. The Base Flood Elevation is the water-surface elevation of the 1% annual chance flood.

ZONE A	No Base Flood Elevations determined.
ZONE AE	Base Flood Elevations determined.
ZONE AH	Flood depths of 1 to 3 feet (usually areas of ponding); Base Flood Elevations determined.
ZONE AO	Flood depths of 1 to 3 feet (usually sheet flow on sloping terrain); average depths determined. For areas of alluvial fan flooding, velocities also determined.
ZONE AR	Special Flood Hazard Area formerly protected from the 1% annual chance flood by a flood control system that was subsequently decertified. Zone AR indicates that the former flood control system is being restored to provide protection from the 1% annual chance or greater flood.
ZONE A99	Area to be protected from 1% annual chance flood by a Federal flood protection system under construction; no Base Flood Elevations determined.
ZONE V	Coastal flood zone with velocity hazard (wave action); no Base Flood Elevations determined.
ZONE VE	Coastal flood zone with velocity hazard (wave action); Base Flood Elevations determined.

FLOODWAY AREAS IN ZONE AE

The floodway is the channel of a stream plus any adjacent floodplain areas that must be kept free of encroachment so that the 1% annual chance flood can be carried without substantial increases in flood heights.

OTHER FLOOD AREAS

ZONE X — Areas of 0.2% annual chance flood; areas of 1% annual chance flood with average depths of less than 1 foot or with drainage areas less than 1 square mile; and areas protected by levees from 1% annual chance flood.

OTHER AREAS

ZONE X — Areas determined to be outside the 0.2% annual chance floodplain.

ZONE D — Areas in which flood hazards are undetermined, but possible.

COASTAL BARRIER RESOURCES SYSTEM (CBRS) AREAS

OTHERWISE PROTECTED AREAS (OPAs)

CBRS areas and OPAs are normally located within or adjacent to Special Flood Hazard Areas.

	1% annual chance floodplain boundary
	0.2% annual chance floodplain boundary
	Floodway boundary
	Zone D boundary
	CBRS and OPA boundary
	Boundary dividing Special Flood Hazard Area Zones and boundary dividing Special Flood Hazard Areas of different Base Flood Elevations, flood depths or flood velocities.
513	Base Flood Elevation line and value; elevation in feet*
(EL 987)	Base Flood Elevation value where uniform within zone; elevation in feet*

* Referenced to the North American Vertical Datum of 1988

W — W	Cross section line
S — S	Transect line
87°07'45", 32°22'30"	Geographic coordinates referenced to the North American Datum of 1983 (NAD 83), Western Hemisphere
°76000'N	1000-meter Universal Transverse Mercator grid values, zone 10N
600000 FT	5000-foot grid ticks: California State Plane coordinate system, zone III (FIPSZONE 0403), Lambert Conformal Conic projection
DX5510	Bench mark (see explanation in Notes to Users section of this FIRM panel)
● M1.5	River Mile

MAP REPOSITORY
Refer to listing of Map Repositories on Map Index

EFFECTIVE DATE OF COUNTYWIDE
FLOOD INSURANCE RATE MAP

EFFECTIVE DATE(S) OF REVISION(S) TO THIS PANEL

For community map revision history prior to countywide mapping, refer to the Community Map History table located in the Flood Insurance Study report for this jurisdiction.

To determine if flood insurance is available in this community, contact your Insurance agent or call the National Flood Insurance Program at 1-800-638-6620.

MAP SCALE 1" = 500'

250 0 500 1000 FEET

150 0 150 300 METERS

NFIP

NATIONAL FLOOD INSURANCE PROGRAM

PANEL 0058H

FIRM

FLOOD INSURANCE RATE MAP

SANTA CLARA COUNTY, CALIFORNIA

AND INCORPORATED AREAS

PANEL 58 OF 830

(SEE MAP INDEX FOR FIRM PANEL LAYOUT)

CONTAINS:

COMMUNITY	NUMBER	PANEL	SUFFIX
MILPITAS, CITY OF	060344	0058	H
SAN JOSE, CITY OF	060349	0058	H

REVISED PRELIMINARY
NOVEMBER 30, 2007

Notice to User: The **Map Number** shown below should be used when placing map orders; the **Community Number** shown above should be used on insurance applications for the subject community.

MAP NUMBER
06085C0058H

EFFECTIVE DATE

Federal Emergency Management Agency

Tab 3

RUGGERI-JENSEN-AZAR

ENGINEERS • PLANNERS • SURVEYORS

May 26, 2009

Mr. Charles D. Anderson, PE
Schaaf & Wheeler Consulting Civil Engineers
100 N. Winchester Blvd., Suite 200
Santa Clara, CA 95050

RE: Levee Recertification for Lower Penetencia Creek, Milpitas, CA

Dear Mr. Anderson:

As a Licensed Land Surveyor in the State of California, please consider this letter my certification that the field surveys for Lower Penetencia Creek were performed under my direct supervision and that all surveys were performed in accordance with standard practices.

Control for these surveys was established on the California NAD 83 State Plane Coordinate System, Zone 3, 2002 epoch and elevations are based upon NAVD 1998.

Please feel free to call me with any questions.

Sincerely,
Ruggeri-Jensen-Azar & Associates

By: Andrew S. Chafer, PLS 8005
Senior Surveyor

PROFESSIONAL LAND SURVEYOR
ANDREW S. CHAFER
No. 8005
Exp. 12/31/10
STATE OF CALIFORNIA

8055 CAMINO ARROYO, GILROY, CA 95020

T: (408) 848-0300 / F: (408) 848-0302 / www.rja-gps.com

Santa Clara County Contours

Data format: LAS, ASCII, ESRI geodatabase, Microstation V8, AutoCAD 2004

Coordinate system: State Plane Coordinate System

Theme keywords: LiDAR, DEM, DTM, ESRI personal geodatabase, DGN (V8), AutoCAD 2004

FGDC and ESRI Metadata:

- Identification Information
- Data Quality Information
- Spatial Data Organization Information
- Spatial Reference Information
- Distribution Information
- Metadata Reference Information

Metadata elements shown with blue text are defined in the Federal Geographic Data Committee's (FGDC) *Content Standard for Digital Geospatial Metadata (CSDGM)*. Elements shown with green text are defined in the *ESRI Profile of the CSDGM*. Elements shown with a green asterisk (*) will be automatically updated by ArcCatalog. ArcCatalog adds hints indicating which FGDC elements are mandatory; these are shown with gray text.

Identification Information:

Citation:

Citation information:

Originators: Optimal Geomatics, Inc

Title:

Santa Clara County Contours

Edition: 1.0

Geospatial data presentation form: LiDAR ASCII, ESRI personal geodatabase, DGN (V8) and AutoCAD (2004)

Publication information:

Publication place: Santa Clara County, California

Publisher: Santa Clara County, California

Description:

Abstract:

LAS format files, raw LiDAR data in its native format, classified bare-earth LiDAR DEM and photogrammetrically derived breaklines generated from LiDAR Intensity stereo-pairs., Breakline, Top of Bank, and contour files in ESRI personal geodatabase format, Microstation V8 .dgn format, and AutoCAD 2004 formats for the San Jose Phase 3 project of Santa Clara County, Ca.

Purpose:

The purpose of the bare-earth LiDAR Point and Breakline data is to provide ground surface data and one-foot (Valley Area) and five-foot (Mountain Areas) contour generation, and the delineation of watercourse (Top of Bank).

Supplemental information:
Breaklines were derived through photogrammetric techniques utilizing LiDAR intensity stereo-pairs.

Language of dataset: English (U.S.)

Time period of content:
Time period information:
Range of dates/times:
Beginning date: 06 April 2006
Ending date: 01 May 2006

Currentness reference:
ground condition

Status:
Progress: In work
Maintenance and update frequency: As needed

Spatial domain:
Bounding coordinates:
West bounding coordinate: 6051705.291546
East bounding coordinate: 6357983.392299
North bounding coordinate: 2011601.113402
South bounding coordinate: 1782807.312840

Keywords:
Theme:
Theme keywords: LiDAR, DEM, DTM, ESRI personal geodatabase, DGN (V8), AutoCAD 2004
Theme keyword thesaurus: None

Place:
Place keywords: United States, Santa Clara County, California, San Jose
Place keyword thesaurus: None

Temporal:

Access constraints: None
Use constraints:
The DTM data represents the results of data collection/processing for Santa Clara, California and indicates the existing general conditions. As such, they are only valid for their intended use, content, time and accuracy specifications. The user is responsible for the results of any application of data other than its intended purposes.

Point of contact:
Contact information:
Contact person primary:
Contact person: Stuart MacRitchie
Contact organization: Triathlon Ltd./MDA Geospatial Services

Contact address:
Address type: mailing address
Address:
13800 Commerce Parkway

City: Richmond
State or province: BC
Postal code: V6V 2J3
Country: Canada

Contact voice telephone: 604-233-5003
Contact facsimile telephone: 604-233-5005

Contact electronic mail address: smacritc@mda.ca

Hours of service: 8:00 am - 5:00 pm PST

Data set credit:
Optimal Geomatics, Inc
2227 Drake Avenue, SW.
Bldg. 14
Huntsville, AL 35805
Contact: Ronny Taylor
Phone: 256-882-7788
Fax: 256-882-7774
Contract No. RV-11328

Security information:
Security classification system: None
Security classification: Unclassified

Native dataset format: LAS, ASCII, ESRI geodatabase, Microstation V8, AutoCAD 2004

Back to Top

Data Quality Information:

Attribute accuracy:
Attribute accuracy report:
LiDAR DEMs to support 1' contours have a maximum RMSE of 9 centimeters, which is roughly equivalent to 0.6' accuracy with a 95% confidence. Field verification of the vertical accuracy of the LiDAR DEM was conducted to ensure that the 9-centimeter RMSE requirement was satisfied for all major vegetation categories that were predominate within the 1' contour area.

Quantitative attribute accuracy assessment:
Attribute accuracy value: NSSDA 95% Confidence: 0.6'
Attribute accuracy explanation:
The RMSE calculated from a sample of test points is not the RMSE of the DEM. The calculated value may be higher or it may be lower than that of the DEM. Confidence in the calculated value increases with the number of test points. If the errors (lack of accuracy) associated with the DEM are normally distributed and unbiased, the confidence in the calculated RMSE can be determined as a function of sample size. Similarly, the sample RMSE necessary to obtain 95-percent confidence that the DEM RMSE is less than 9 centimeters can also be determined as a function of sample size. Optimal Geomatics collected test points using RTK (Real-Time Kinematic) GPS techniques. Over one hundred and twenty points were collected in total

over various terrain classes. All RMSE calculations were performed on the bare-earth, orthometric surface.

Logical consistency report:

LiDAR was classified and stereo-pairs were generated from LiDAR intensity data which were used to collect breaklines and top of bank. A surface was generated from the bare earth LiDAR DTM and collected breakline data to produce 1', 5', 10' and 25' contours in pre-assigned areas designated by the client.

Completeness report:

Each strip was imported into a project using TerraScan (Terrasolid, Ltd.) and the project management tool GeoCue (GeoCue Corp.). By creating a project, the various flightlines are combined while breaking the dataset as a whole into manageable pieces. This process also converts the dataset from geographic coordinates to the State Plane Coordinate System (NAD83), California III. The ellipsoid height values were converted to NAVD88 orthometric values using Geoid03, provided by NGS. Individual lines were then checked against adjacent lines to ensure a cohesive dataset. The data from each line were then combined and a classification routine was then run to determine the initial surface model. This initial surface model was then reduced using Optimal Geomatics' proprietary methods to create the final bare-earth dataset. A Triangular Irregular Network (TIN) was generated using the final surface data. Contours were then created from the TIN. The bareearth data were then checked against the validation points across the project area. The results of these checks showed the DEM fitting the validation points well (see LiDAR DEM Quality Control Report for results). Stereo pairs were generated from the LiDAR intensity data using Geocue and LiDAR1CuePac (GeoCue Corp.). LiDARgrammetry was then utilized to collect breaklines where necessary along hydro features to support the contour generation. These breaklines were collected as a 3D element in the MicroStation (Bentley Systems, Inc.) environment utilizing ISSD (Z/I Imaging). The breaklines, top of bank (TOB), contour files were delivered in MicroStation v8, AutoCAD 2004 and ESRI Personal GeoDatabase formats. The LiDAR point data were delivered in LAS and ASCII formats. LiDAR orthos were delivered in TIF/TFW format.

Positional accuracy:

Horizontal positional accuracy:

Horizontal positional accuracy report:

No specific testing was done to determine horizontal accuracy of the DTM. Test results for vertical accuracy tend to show that the 0.75m (2.46 US survey feet) RMSE horizontal accuracy tolerance determined by system studies and other methods was met or exceeded.

Quantitative horizontal positional accuracy assessment:

Horizontal positional accuracy value: 0.75 m (2.46 US survey feet)

Horizontal positional accuracy explanation:

Expected horizontal accuracy of elevation products as determined from system studies
and other methods is 1/2000th of the flight height, which in the instance of this particular
project was 1500m (4921.2 US survey feet) AGL, giving a horizontal tolerance of less
than 0.75m (2.46 US survey feet).

Vertical positional accuracy:

Vertical positional accuracy report:

Tested to meet 0.6 ft vertical accuracy at 95 percent confidence level.

Quantitative vertical positional accuracy assessment:
Vertical positional accuracy value: NSSDA 95% Confidence: 0.21' in open terrain
Vertical positional accuracy explanation:
Tested 0.21' in open terrain at ninety-five percent confidence level using RMSE(z) x 1.9600.

Lineage:
Source information:
Source citation:
Citation information:
Originators: San Jose, California

Title:
San Jose Phase 3, Santa Clara County, California LiDAR Survey

Publication date: 2006
Publication time: Unknown
Edition: 1.0
Geospatial data presentation form: LiDAR ASCII, ESRI personal geodatabase, DGN (V8), and AutoCAD (2004)

Publication information:
Publication place: San Jose, Santa Clara County, California
Publisher: San Jose, Santa Clara County, California

Type of source media: FireWire & DVD (3-sets)
Source contribution:
LiDAR DEM
LiDARGrammetry derived Breaklines & TOB
Contours

Source time period of content:
Time period information:
Range of dates/times:
Beginning date: 06 April 2006
Ending date: 01 May 2006

Source currentness reference:
ground condition

Process step:
Process description:
Each strip was imported into a project using TerraScan (Terrasolid, Ltd.) and the project management tool GeoCue (GeoCue Corp.). By creating a project the various flightlines are combined while breaking the dataset as a whole into manageable pieces. This process also converts the dataset from geographic coordinates to the State Plane Coordinate System (NAD83), California III. The ellipsoid height values were converted to NAVD88 orthometric values using Geoid03, provided by NGS. Individual lines were then checked against adjacent lines to ensure a cohesive dataset. The data from each line were then combined and a classification routine was then run to determine the initial surface model. This initial surface model was then reduced using Optimal Geomatics' proprietary methods to create the final bare-earth dataset. A Triangular Irregular Network (TIN) was generated using the final surface data. Contours were then created from

the TIN. The bareearth data were then checked against the validation points across the project area. The results of these checks showed the DEM fitting the validation points well (see LiDAR DEM Quality Control Report for results). Stereo pairs were generated from the LiDAR intensity data using Geocue and LiDAR1CuePac (GeoCue Corp.). LiDARgrammetry was then utilized to collect breaklines where necessary along hydro features to support the contour generation. These breaklines were collected as a 3D element in the MicroStation (Bentley Systems, Inc.) environment utilizing ISSD (Z/I Imaging). The breaklines, top of bank (TOB), contour files were delivered in MicroStation v8, AutoCAD 2004 and ESRI formats. The LiDAR point data were delivered in LAS and ASCII formats. LiDAR orthos were delivered in TIF/TFW format.

Process date: Not complete

Source used citation abbreviation:
N/A
Source produced citation abbreviation:
N/A

Process contact:
Contact information:
Contact organization primary:
Contact person: Stuart MacRitchie
Contact organization: Triathlon, Ltd. / MDA Geospatial Services

Contact address:
Address type: mailing and physical address
Address:
13800 Commerce Parkway
Address:
MacDonald Dettwiler Bldg.
City: Richmond
State or province: BC
Postal code: V6V 2J3
Country: Canada

Contact voice telephone: 604-233-5003
Contact facsimile telephone: 604-233-5005

Contact electronic mail address: smacritc@mda.ca

Hours of service: 8:00 am - 5:00 pm PST

Back to Top

Spatial Data Organization Information:

Direct spatial Rreference method: Point & Vector

Point and vector object information:
ESRI terms description :

Feature description: LiDAR DEM

ESRI terms description :
Feature description: Breakline

ESRI terms description :
Feature description: Top of Bank

ESRI terms description :
Feature description: Contours

Back to Top

Spatial Reference Information:

Horizontal coordinate system definition:
Coordinate system name:
Projected coordinate system name: California State Plane Coordinate Zone 3

Planar:
Grid coordinate system:
Grid coordinate system name: State Plane Coordinate System
State Plane Coordinate System:
SPCS zone identifier: 403
Lambert conformal conic:
Standard parallel: 37:04:00:00
Standard parallel: 38:26:00:00
Longitude of central meridian: -120:30:00
Latitude of projection origin: 36:30:00
False easting: 6561666.667
False northing: 1640416.667

Planar coordinate information:
Planar coordinate encoding method: coordinate pair
Planar distance units: survey feet

Geodetic model:
Horizontal datum name: North American Datum of 1983
Ellipsoid name: Clarke 1866
Semi-major axis: 6378403.701 m
Denominator of flattening ratio: 298.2572221008827

Vertical coordinate system definition:
Altitude system definition:
Altitude datum name: North American Vertical Datum of 1988
Altitude resolution: .001
Altitude distance rnits: feet
Altitude encoding method: Implicit coordinate

Depth system definition:
Depth datum name: Mean sea level
Depth resolution: .01
Depth distance units: feet
Depth encoding method: Implicit coordinate

Back to Top

Distribution Information:

Distributor:
Contact information:
Contact person primary:
Contact person: Stuart MacRitchie
Contact organization: Triathlon, Ltd. / MDA Geospatial Services

Contact address:
Address type: mailing address
Address:
13800 Commerce Parkway
City: Richmond
State or province: BC
Postal code: V6V 2J3
Country: Canada

Contact voice telephone: 604-233-5003
Contact facsimile telephone: 604-233-5005

Contact electronic mail address: smacritc@mda.ca

Hours of service: 8:00 am - 5:00 pm PST

Resource description: City, Government

Distribution liability:
The LiDAR data represents the results of data collection/processing for Santa Clara County, California and indicates the general conditions existing at the time of flight. As such, it is only valid for its intended use, content, time and accuracy specifications. The user is responsible for the results of any application of the data other than for its intended purpose.

Standard order process:
Digital form:
Digital transfer information:
Format name: ASCII
Format specification:
3D LiDAR
Format information content:
XYZI and LAS
File decompression technique: Uncompressed

Digital transfer option:
Online option:
Computer contact information:
Network address:
Network resource name: N/A

Digital form:

Digital transfer information:
Format name: DWG
Format version number: 2004
Format specification:
3D DWG
Format information content:
Index, Intermediate, Brkline and TOB

Digital form:
Digital transfer information:
Format name: DGN
Format version number: V8
Format specification:
3D DGN
Format information content:
Index, Intermediate, brkline, and TOB

Digital form:
Digital transfer information:
Format name: ESRI
Format version number: personal geodatabase
Format information content:
1 foot, 5 foot, 10 foot, 25 foot contours, breaklines and top of bank

Fees: N/A

Available time period:
Time period information:
Single date/time:
Calendar date: unknown

Back to Top

Metadata Reference Information:

Metadata date: 20060607

Metadata contact:
Contact information:
Contact organization primary:
Contact person: Stuart MacRitchie
Contact organization: Triathlon, Ltd. / MDA Geospatial Services

Contact address:
Address type: mailing and physical address
Address:
13800 Commerce Parkway
Address:
MacDonald Dettwiler Bldg.
City: Richmond
State or province: BC
Postal code: V6V 2J3
Country: Canada

Contact voice telephone: 604-233-5003
Contact facsimile telephone: 604-233-5005

Contact electronic mail address: smacritc@mda.ca

Hours of service: 8:00 am - 5:00 pm PST

Metadata standard name: FGDC Content Standards for Digital Geospatial Metadata
Metadata standard version: FGDC-STD-001-1998
Metadata time convention: local time

Metadata extensions:
Online linkage: http://www.esri.com/metadata/esriprof80.html
Profile name: ESRI Metadata Profile

Back to Top

Tab 4

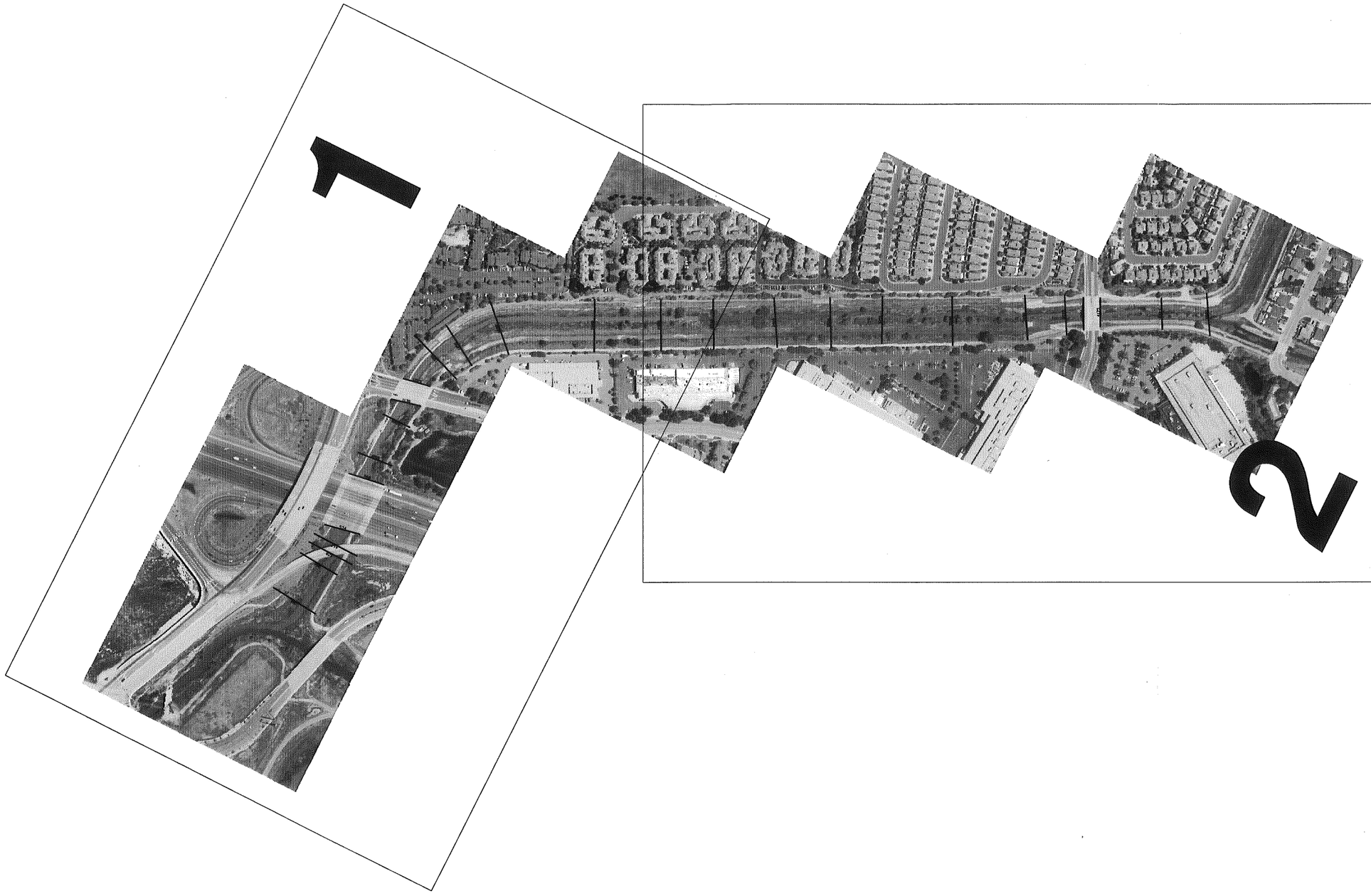
1
2

Lower Penitencia Cross-Section Locations - Figure 1

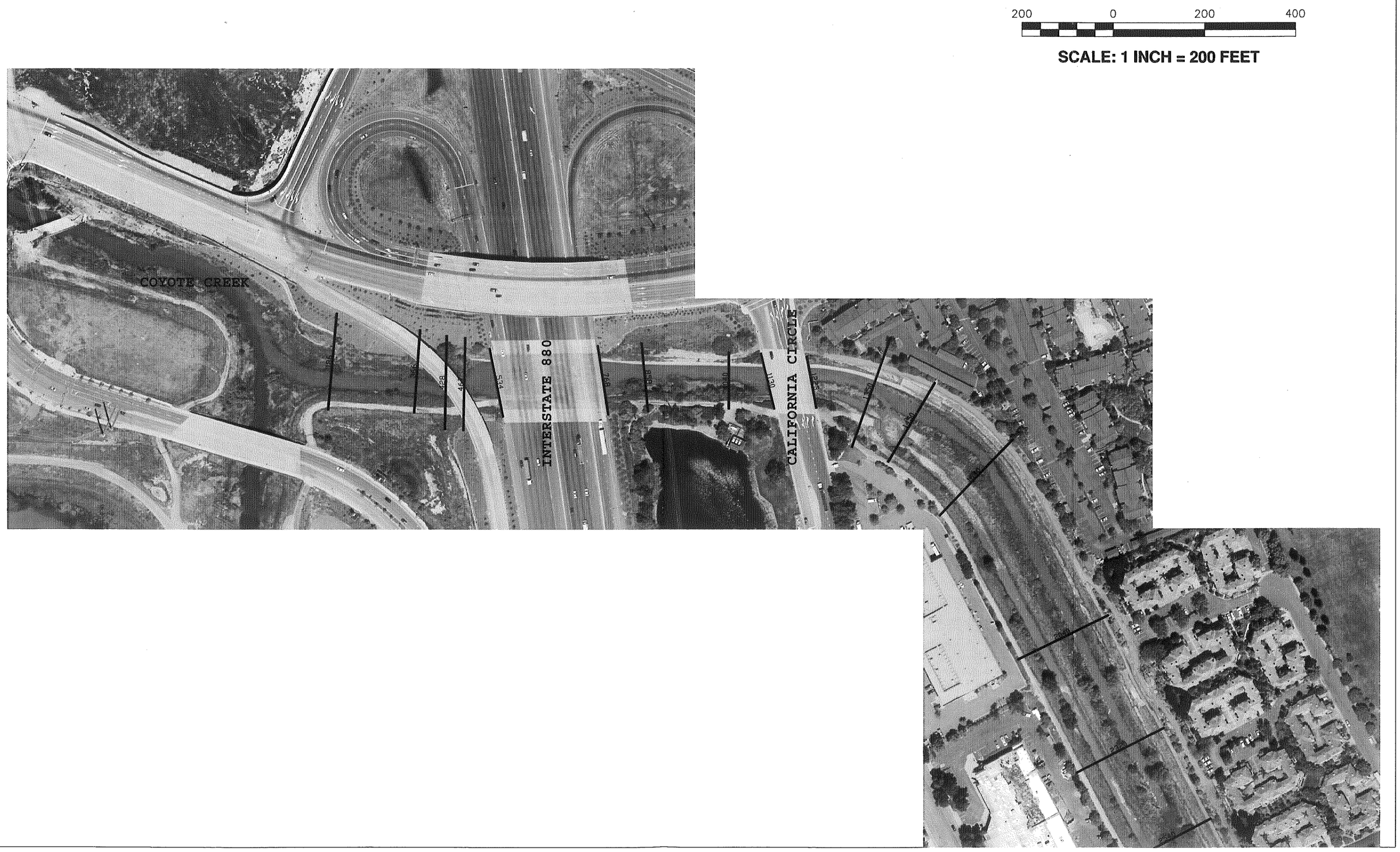

Schaaf & Wheeler

Lower Penitencia Cross-Section Locations - Figure 2

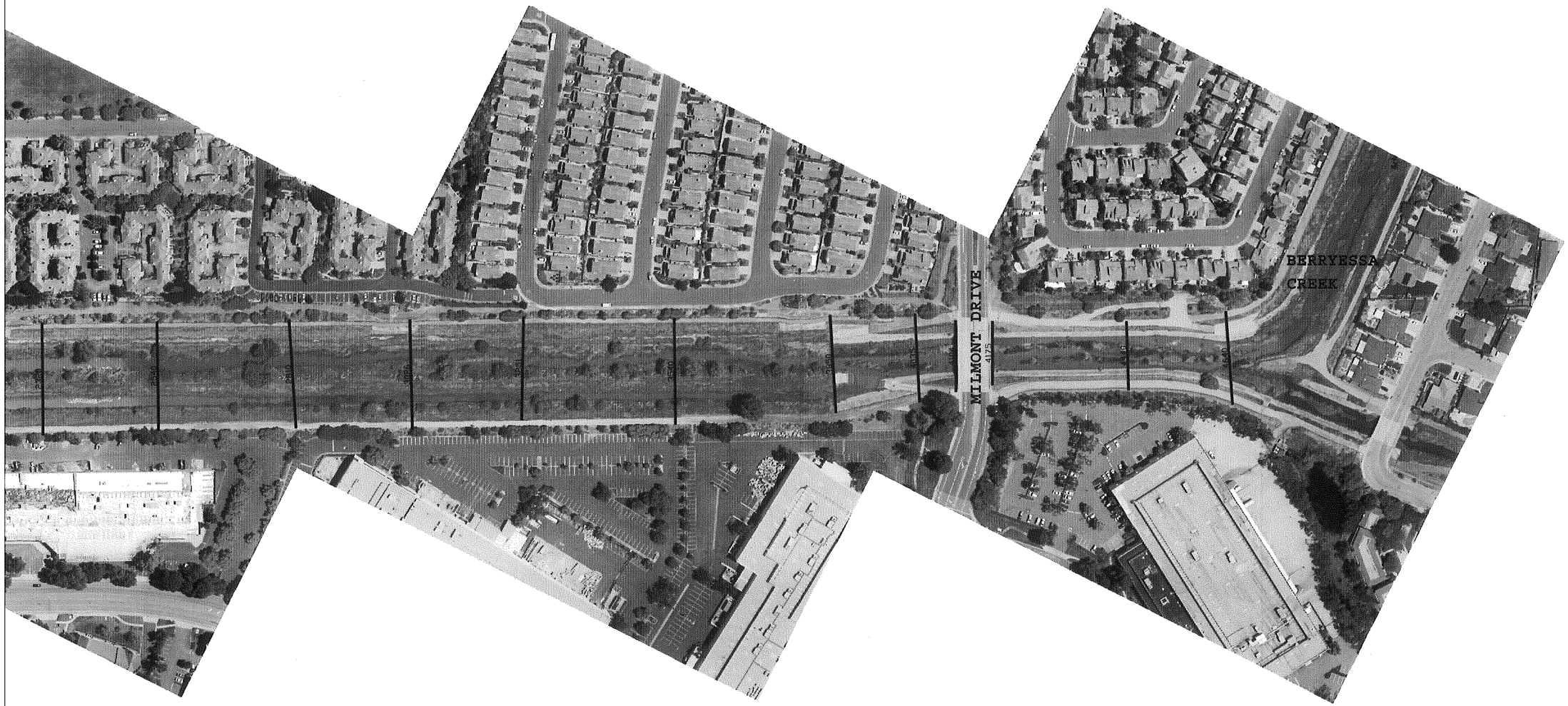

200 0 200 400

SCALE: 1 INCH = 200 FEET

Schaaf & Wheeler

Lower Penitencia Creek
Interior Drainage

Legend

- Levee Protected
- Jurgens Flooding
- 11ft Contour

N

0 100 200 400 600 800 F

Tab 5

BENCHMARK
USC&GS BENCHMARK "COYOTE" AT WEST END OF NORTH WALL OF HIGHWAY BRIDGE AT DIXON LANDING ROAD AND HIGHWAY 17 IN CITY OF MILPITAS (NOLTE RM 227) ELEV. 30.51

BASIS OF BEARINGS
THE MONUMENT LINE OF DIXON LANDING ROAD (S87°53'12"W) AS SHOWN UPON THE PARCEL MAP RECORDED IN BOOK 508 OF MAPS AT PAGES 38,39 & 40 RECORDS OF SANTA CLARA COUNTY, WAOS TAKEN AS THE BASIS OF BEARINGS FOR THESE PLANS.

LEGEND AND ABBREVIATIONS
- E. FLOWLINE
- G.B. GRADE BREAK
- T.L. TOP OF LEVEE
- BOTTOM OF CHANNEL
- PROPERTY LINE
- RIP RAP
- CONTROL LINE
- EXIST. EASEMENT
- NEW EASEMENT

SHEET INDEX

1. COVER SHEET
2. STRUCTURAL DETAILS
3. STRUCTURAL DETAILS
4. PLAN AND PROFILE
5. PLAN AND PROFILE
6. PLAN AND PROFILE
7. PLAN AND PROFILE
8. CROSS SECTIONS
9. CROSS SECTIONS
10. CROSS SECTIONS
11. RETAINING WALLS

PLANS FOR THE IMPROVEMENT OF EASTERLY LEVEE OF LOWER PENITENCIA CREEK

MILPITAS CALIFORNIA

SEPTEMBER 1988

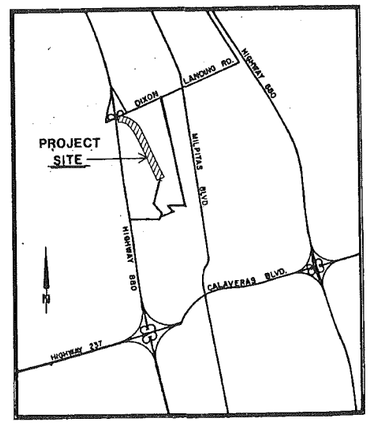

VICINITY MAP
N.T.S.

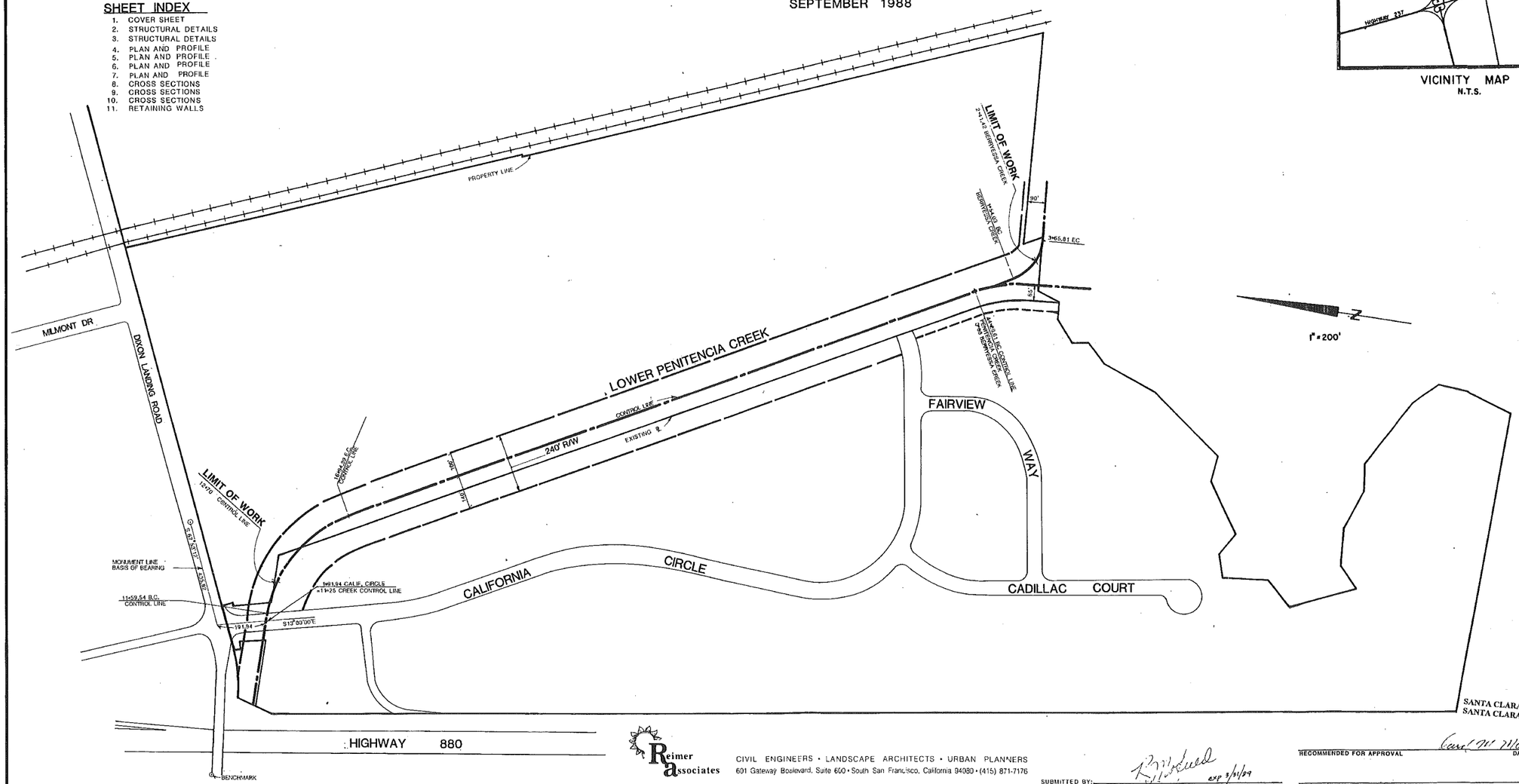

Reimer Associates
CIVIL ENGINEERS • LANDSCAPE ARCHITECTS • URBAN PLANNERS
601 Gateway Boulevard, Suite 600 • South San Francisco, California 94080 • (415) 871-7176

SUBMITTED BY: RALPH J. NOFIELD exp 3/31/89 R.C.E. 13508

RECOMMENDED FOR APPROVAL DAVID M. MCNEELY

APPROVED BY CITY COUNCIL ACTION MINUTES DATED 21 NOV. 1989

SANTA CLARA_CA Work Maps
SANTA CLARA_CA0726

MICHAEL BAKER, JR. INC. RECEIVED MAY 1 1990 ALEXANDRIA, VA.

R-1063
SHEET 1 OF 11

ENCLOSURE (3)

2-754

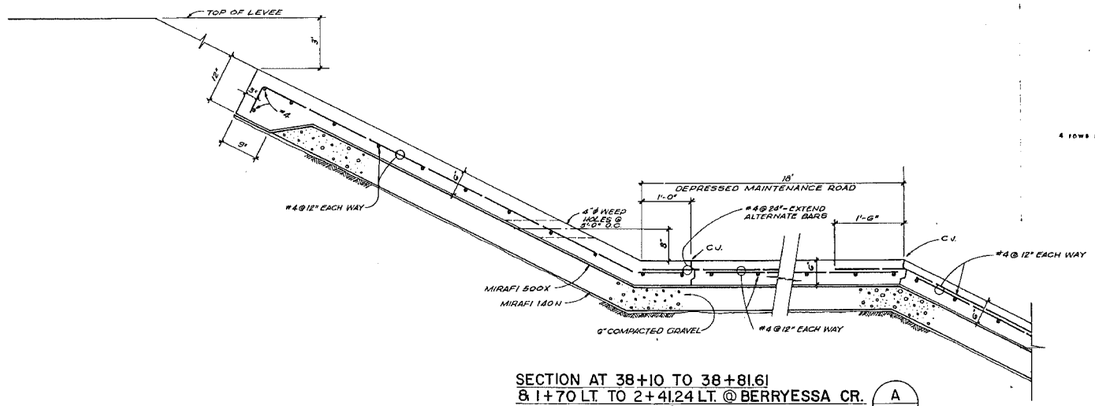

SECTION AT 38+10 TO 38+81.61
& 1+70 LT. TO 2+41.24 LT. @ BERRYESSA CR. (A/2)
SCALE 3/8" = 1'-0"

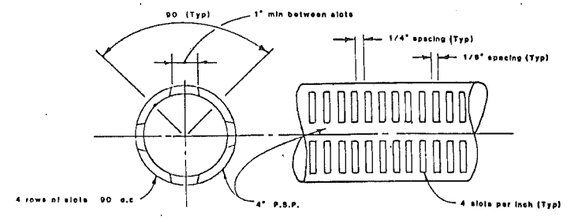

P.S.P. PIPE SLOTS
N.T.S.

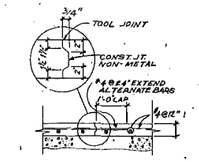

TYPICAL CONSTRUCTION AND CONTRACTION JOINT (E/2)
N.T.S.

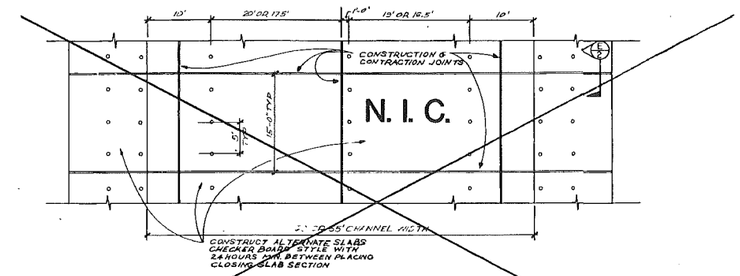

TYPICAL PLAN

CONSTRUCTION SEQUENCE
1. PLACE BOTTOM SLAB & PLACE CORNER BLOCK
2. PLACE SLOPE PAVING

NOTES
1. ALL REINFORCING TO BE GRADE 60
2. ALL CONCRETE SHALL BE 3000 P.S.I. @ 28 DAYS
3. TRANSVERSE CONST. JOINTS @ 15'-0" O.C.
4. C.J. = CONSTRUCTION JOINT

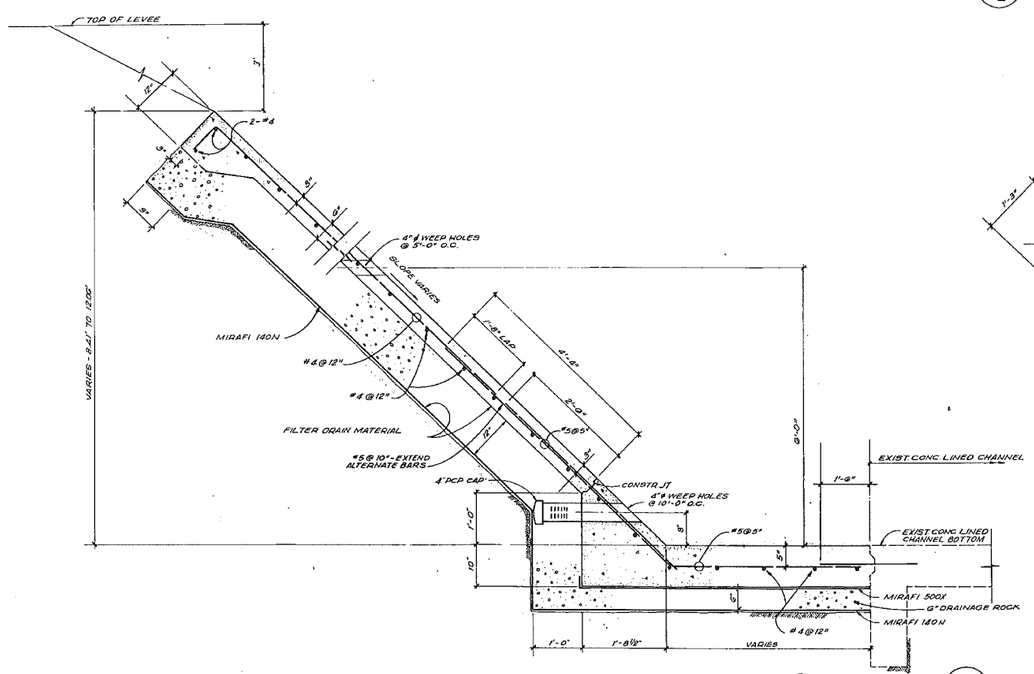

SECTION BETWEEN STA.0+00 LT. & STA.2+41.24 LT. @ BERRYESSA CR (B/2)
SCALE 3/8" = 1'-0"

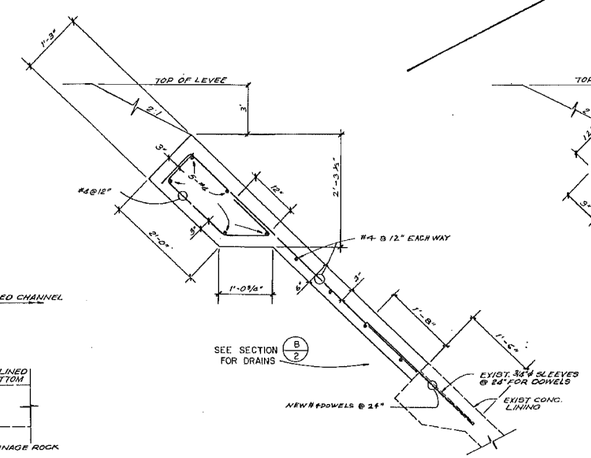

SECTION AT PROPOSED EXTENSION OF LINING (C/2)
STA. 40+00 TO 40+40(LT.)
41+25 TO 41+80(LT.)
N.T.S.

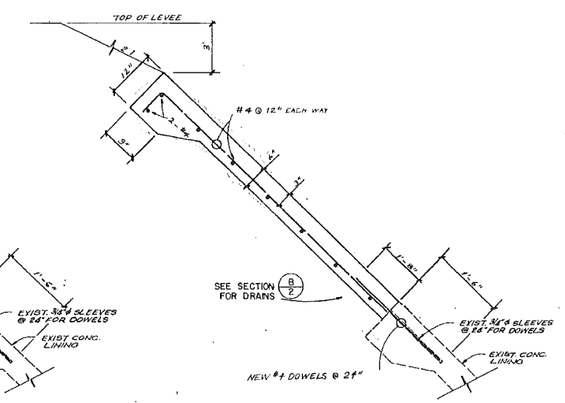

SECTION AT PROPOSED EXTENSION OF LINING (D/2)
STA. 38+81.61 TO 40+00(LT.)
40+40 TO 41+25(LT.)
41+80 TO 44+29.61(LT.)
N.T.S.

SANTA CLARA_CA Work Maps
SANTA CLARA_CA0727

DATE: SEPTEMBER 1988			
SCALE: AS SHOWN			
DESIGNED: WB			
DRAWN: DEE			
CHECKED: DCF, KS			
PROJ. ENGR: RJN			
	BY	DATE	REVISIONS

Reimer Associates
CIVIL / ENVIRONMENTAL SYSTEMS ENGINEERS • URBAN PLANNERS
1633 Old Bayshore Highway • Burlingame, California 94010 • (415) 692-1830

STRUCTURAL DETAILS
LOWER PENITENCIA CREEK
MILPITAS CALIFORNIA

RECEIVED MAY 31 1990 ALEXANDRIA, VA

SHEET 2 OF 11 SHEETS
JOB NO. 1063

2-754

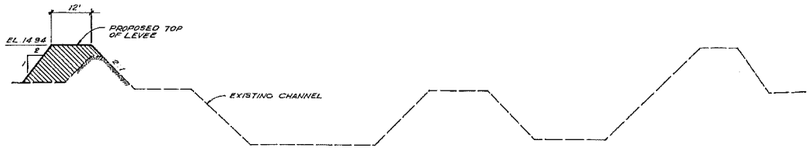

SECTION AT END OF EXISTING CONCRETE LINING

STA. 14+45

SCALE 1" = 20'

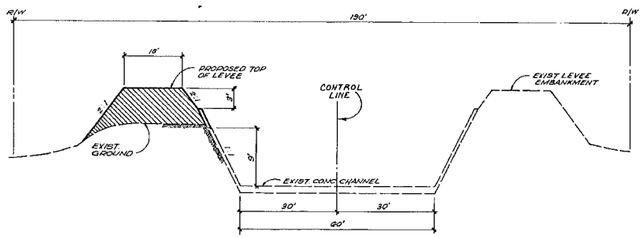

TYPICAL SECTION

STA. 40+50 TO 44+29.61

SCALE 1" = 20'

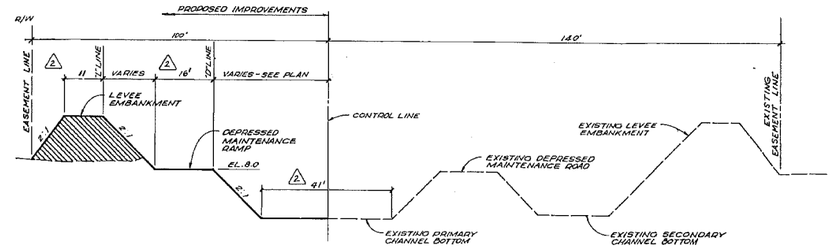

TYPICAL SECTION

STA. 15+45 TO 37+00 LT.

SCALE 1" = 20'

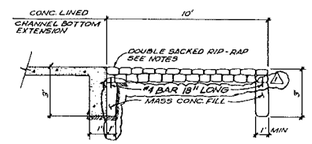

SECTION AT END OF CONCRETE LINED CHANNEL

AT STA. 38+10 LT., 14+45 LT.
& STA. 2+41.24 LT. AT BERRYESSA CREEK

SCALE 1/4" = 1'-0"

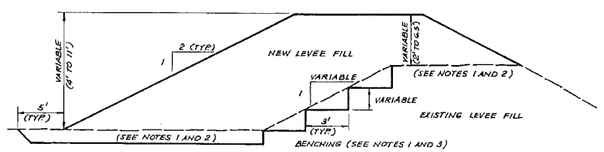

NOTES:

1. ALL AREAS TO RECEIVE FILL SHALL BE STRIPPED OF SURFACE VEGETATION AND ORGANIC SOIL. ANY LOOSE OR UNSTABLE SOIL REMAINING AFTER THE STRIPPING OPERATION SHALL ALSO BE REMOVED OR STABILIZED PRIOR TO THE PLACEMENT OF ANY FILL.
2. THE CREST OF THE EXISTING LEVEE, AND OTHER AREAS INDICATED IN THE FIELD BY THE GEOTECHNICAL ENGINEER, SHALL BE SCARIFIED TO A DEPTH OF 6 INCHES. MOISTURE CONDITIONED, AND RECOMPACTED TO AT LEAST 90 PERCENT OF THE MAXIMUM DRY DENSITY OBTAINED BY ASTM D1557-78, MODIFIED TO 3 LAYERS PRIOR TO THE PLACEMENT OF NEW FILL.
3. ALL NEW LEVEE FILL MATERIAL SHALL BE BENCHED INTO THE SLOPE(S) OF THE EXISTING LEVEE A MINIMUM OF 3 FEET HORIZONTALLY, OR AS REQUIRED BY THE GEOTECHNICAL ENGINEER.

NEW FILL BENCHING AND PLACEMENT DETAIL (EAST BANK)

N.T.S.

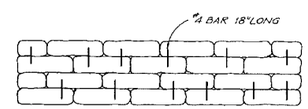

BANK PROTECTION - ELEVATION

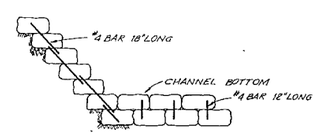

SECTION

RIP RAP PLACEMENT DETAIL

N.T.S.

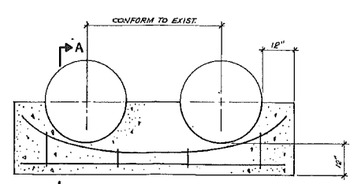

CONCRETE CUT OFF WALL

N.T.S.

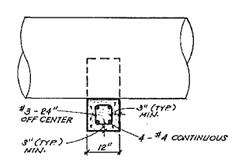

SECTION A-A

GENERAL NOTES

1. THE FIRM OF REIMER ASSOCIATES ASSUMES NO RESPONSIBILITY BEYOND THE ADEQUACY OF ITS DESIGN HEREIN.
2. CONSTRUCTION CONTRACTOR AGREES THAT IN ACCORDANCE WITH GENERALLY ACCEPTED CONSTRUCTION PRACTICES, CONSTRUCTION CONTRACTOR WILL BE REQUIRED TO ASSUME SOLE AND COMPLETE RESPONSIBILITY FOR JOB SITE CONDITIONS DURING THE COURSE OF CONSTRUCTION OF THE PROJECT, INCLUDING SAFETY OF ALL PERSONS AND PROPERTY: THAT THIS REQUIREMENT SHALL BE MADE TO APPLY CONTINUOUSLY AND NOT BE LIMITED TO NORMAL WORKING HOURS, AND CONSTRUCTION CONTRACTOR FURTHER AGREES TO DEFEND, INDEMNIFY AND HOLD DESIGN PROFESSIONAL HARMLESS FROM ANY AND ALL LIABILITY, REAL OR ALLEGED, IN CONNECTION WITH EXCEPTING LIABILITY ARISING FROM THE SOLE NEGLIGENCE OF DESIGN PROFESSIONAL.
3. THE CONTRACTOR SHALL COMPLY WITH THE RULES AND REGULATIONS OF THE STATE CONSTRUCTION SAFETY ORDERS.
4. ALL WORK SHALL BE DONE IN ACCORDANCE WITH THE STATE OF CALIFORNIA BUSINESS AND TRANSPORTATION AGENCY, DEPARTMENT OF TRANSPORTATION "STANDARD SPECIFICATIONS, JANUARY 1984", "STANDARD PLANS, 1984" AND STANDARDS OF THE CITY OF MILPITAS.
5. ALL EXISTING UTILITIES AND IMPROVEMENTS THAT ARE DAMAGED DURING CONSTRUCTION SHALL BE COMPLETELY RESTORED TO THE SATISFACTION OF THE CITY ENGINEER.
6. THE LOCATION AND DEPTHS OF EXISTING UNDERGROUND IMPROVEMENTS SHOWN ARE APPROXIMATE AND BASED UPON AVAILABLE RECORD INFORMATION.
7. CONTRACTOR MUST NOTIFY THE ENGINEER OF DIFFERRING FIELD CONDITIONS IMMEDIATELY UPON DISCOVERY.
8. THESE PLANS WERE PREPARED IN ACCORDANCE WITH INFORMATION AND REQUIREMENTS SET FORTH IN THE FOLLOWING:
   GEOTECHNICAL INVESTIGATION REPORT PREPARED BY WAHLER ASSOCIATES, DATED AUGUST 2, 1988.
   GEOTECHNICAL LETTER REPORT PREPARED BY WAHLER ASSOCIATES, DATED JULY 8, 1988.
   ALL GRADING OPERATIONS AND WORK, INCLUDING SUBGRADE PREPARATION, EXCAVATION, COMPACTION, MATERIAL PLACEMENTS AND REMOVAL AND PLACEMENT OF SURCHARGE MATERIAL SHALL BE DONE IN ACCORDANCE WITH THE RECOMMENDATIONS AND REQUIREMENTS SET FORTH IN SAID REPORTS, AND AS DIRECTED BY WAHLER ASSOCIATES IN THE FIELD.
9. WATER FOR CONSTRUCTION PURPOSES SHALL BE FURNISHED BY CONTRACTOR.
10. CONTRACTOR SHALL SUBMIT A DETAILED PLAN OUTLINING PROPOSED DEWATERING AND EXCAVATION METHODS A MINIMUM OF TWO (2) WEEKS PRIOR TO THE START OF WORK.

RIP-RAP CONSTRUCTION NOTES —(SACKED DRY MIXES ARE NOT PERMITTED)

1. ALL WORK TO BE DONE IN ACCORDANCE WITH THE STANDARD SPECIFICATIONS, STATE OF CALIFORNIA, DEPARTMENT OF TRANSPORTATION. THE VOLUME OF EACH SACK IS TO BE CONTROLLED BY A CHUTE MEASURING DEVICE.
2. FACE OF RIP-RAP TO BE COINCIDENT WITH SIDE SLOPES OR BOTTOM OF CHANNEL. DO NOT PACK UNTIL SMOOTH.
3. THE BOTTOM OF THE CHANNEL SHALL BE DOUBLE SACKED. SACKS SHALL BE LAPPED AND A 1'-0" LONG NO. 4 REBAR SHALL BE DRIVEN THROUGH EACH SACK.
4. THE SACKED CONCRETE ON THE SIDE SLOPES SHALL HAVE A 1'-6" LONG NO. 4 REBAR DRIVEN THROUGH EACH SACK PARALLEL TO THE SLOPE. IN ADDITION, ON TOP OF EVERY FOURTH COURSE OF SACKS, PLACE A NO. 3 REBAR CONTINUOUSLY OR LAPPED 2'-0" WHERE NECESSARY IN THE LONGITUDINAL DIRECTION. TIE TO THE NO. 4 REBARS INSERTED THROUGH THE SACKS. DO NOT LEAVE ENDS OF BARS EXPOSED NOR DRIVE INTO DIRT OR JOINT BETWEEN ENDS OF SACKS.
5. SACKS SHALL BE PLACED SO THAT THEY ARE HORIZONTAL OR SLOPING TOWARDS BANK. SACKS SLOPING AWAY FROM BANK WILL NOT BE ACCEPTED.
6. SACKS PLACED ON THE BANK SHALL BE END-TO-END WITH THE FLOW OF WATER.
7. ALL SACKS SHALL OVERLAP EACH OTHER BY ONE-HALF OF THEIR WIDTH.

DATE: SEPTEMBER 1988				
SCALE: AS SHOWN				
DESIGNED: APR				
DRAWN: DEE				
CHECKED: DCF, KG	2		3-2-89	LEVEE, MAINT. RD. & BOTTOM OF CHANNEL WIDTH
PROJ. ENGR: RJN	1	RJN	11-15-88	SECTION AT END OF CONCRETE LINED CHANNEL DETAIL
		BY	DATE	REVISIONS

Reimer Associates
CIVIL / ENVIRONMENTAL SYSTEMS ENGINEERS • URBAN PLANNERS
1633 Old Bayshore Highway • Burlingame, California 94010 • (415) 692-1830

STRUCTURAL DETAILS

LOWER PENITENCIA CREEK

MILPITAS CALIFORNIA

SANTA CLARA_CA Work Maps
SANTA CLARA_CA0728

MICHAEL BAKER, JR. INC. RECEIVED MAY 31 1990 ALEXANDRIA, VA.

SHEET 3 OF 11 SHEETS

JOB NO. 1063

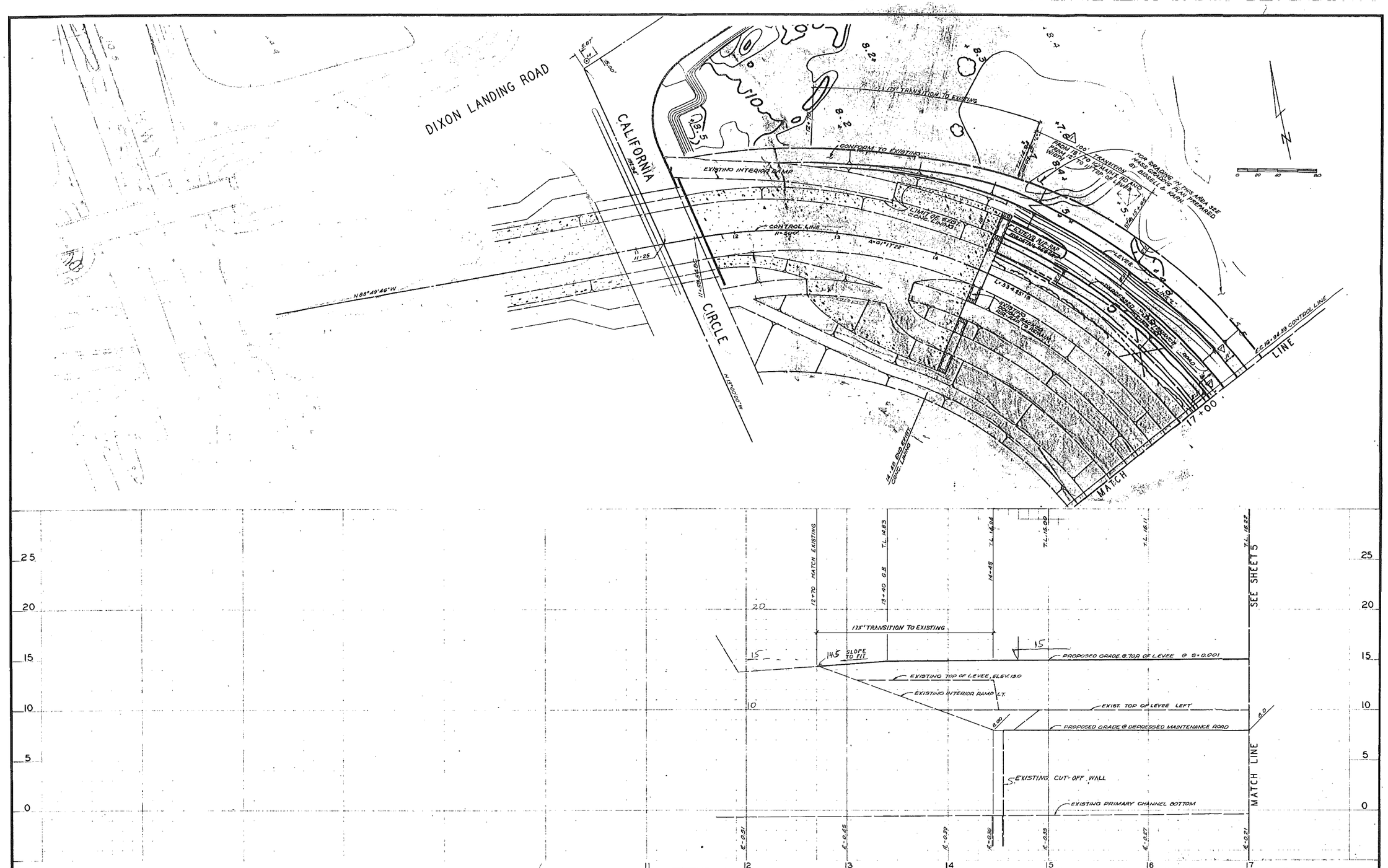

DATE: SEPTEMBER 1988				
SCALE: 1"=40', 1"=4' V				
DESIGNED: APR				
DRAWN: DEE				
CHECKED: DCF, KS				
PROJ. ENGR.: RJN	1	3-2-89	LEVEE & MAINT. ROAD WIDTH	
		BY	DATE	REVISIONS

APPROVED
BY:
DATE: R.C.E.

APPROVED
BY:
DATE: R.C.E.

Reimer Associates
URBAN / ENVIRONMENTAL SYSTEMS ENGINEERS
120 Burlingame Office Center • 1633 Old Bayshore Highway
Burlingame, California • 94010 • (415) 692-1830

PLANS FOR THE IMPROVEMENT OF

LOWER PENITENCIA CREEK

MILPITAS, CALIFORNIA

SANTA CLARA_CA Work Maps
SANTA CLARA_CA0729

RECEIVED MAY 22 1989

SHEET 4 OF 11 SHEETS

JOB NO. 1063

2-754

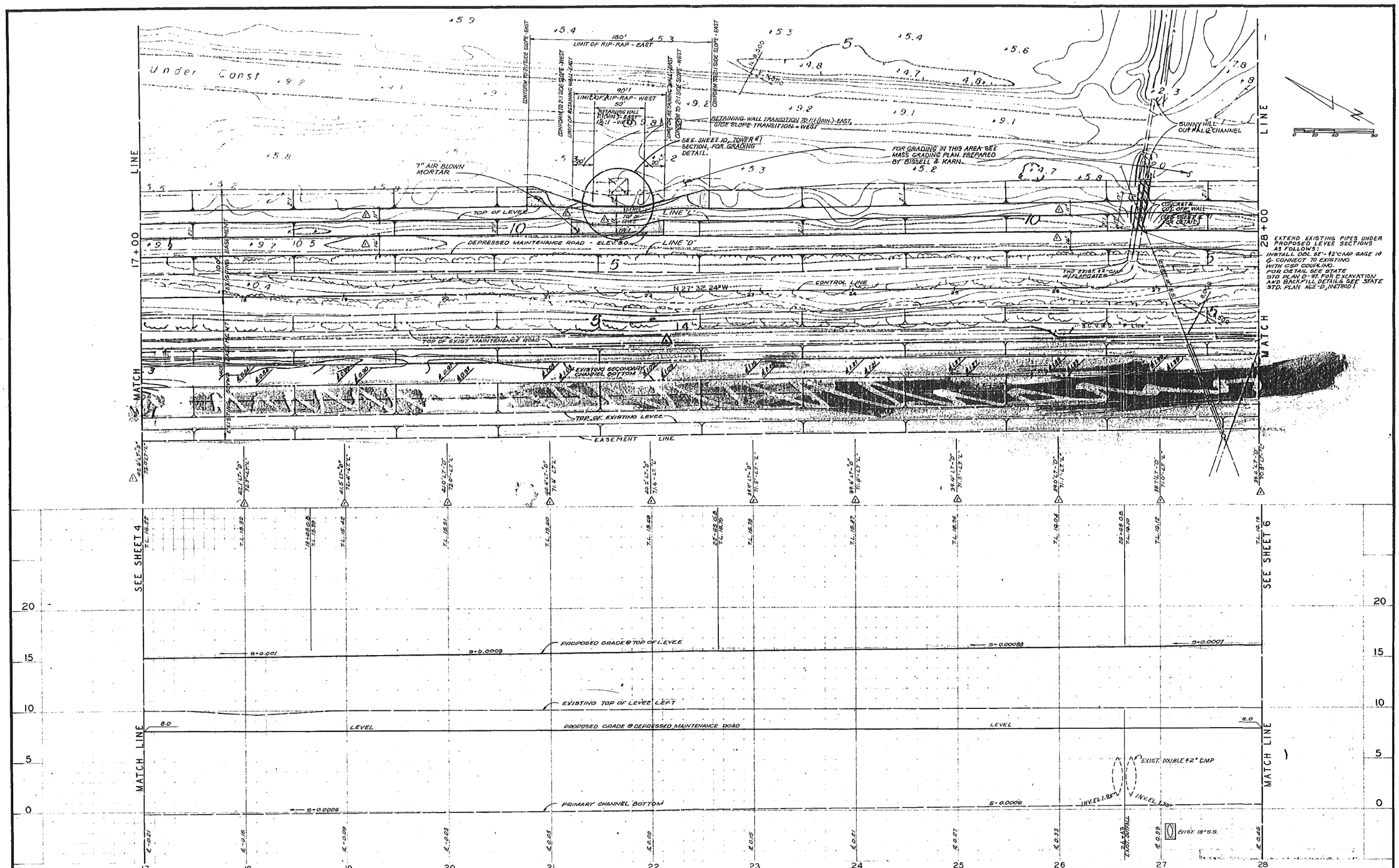

DATE: SEPTEMBER 1988			
SCALE: 1" = 40'H, 1" = 4'V			
DESIGNED: APR			
DRAWN: DEC			
CHECKED: DCF, KS	2	5-8-89	LEVEE SLOPE PROTECTION @ PG&E TOWERS.
PROJ. ENGR.: RJN	1	3-2-89	LEVEES & MAINT. ROAD WIDTH
	BY	DATE	REVISIONS

APPROVED
BY:
DATE: R.C.E.

APPROVED
BY:
DATE: R.C.E.

Reimer Associates
URBAN / ENVIRONMENTAL SYSTEMS ENGINEERS
120 Burlingame Office Center • 1633 Old Bayshore Highway
Burlingame, California • 94010 • (415) 692-1830

PLANS FOR THE IMPROVEMENT OF

LOWER PENITENCIA CREEK

MILPITAS, CALIFORNIA

SANTA CLARA_CA Work Maps
SANTA CLARA_CA0730

MICHAEL BAKER, JR., INC. RECEIVED MAY 31 1990 ALEXANDRIA, VA

SHEET 5 OF 11 SHEETS

JOB NO. 1063

2-754

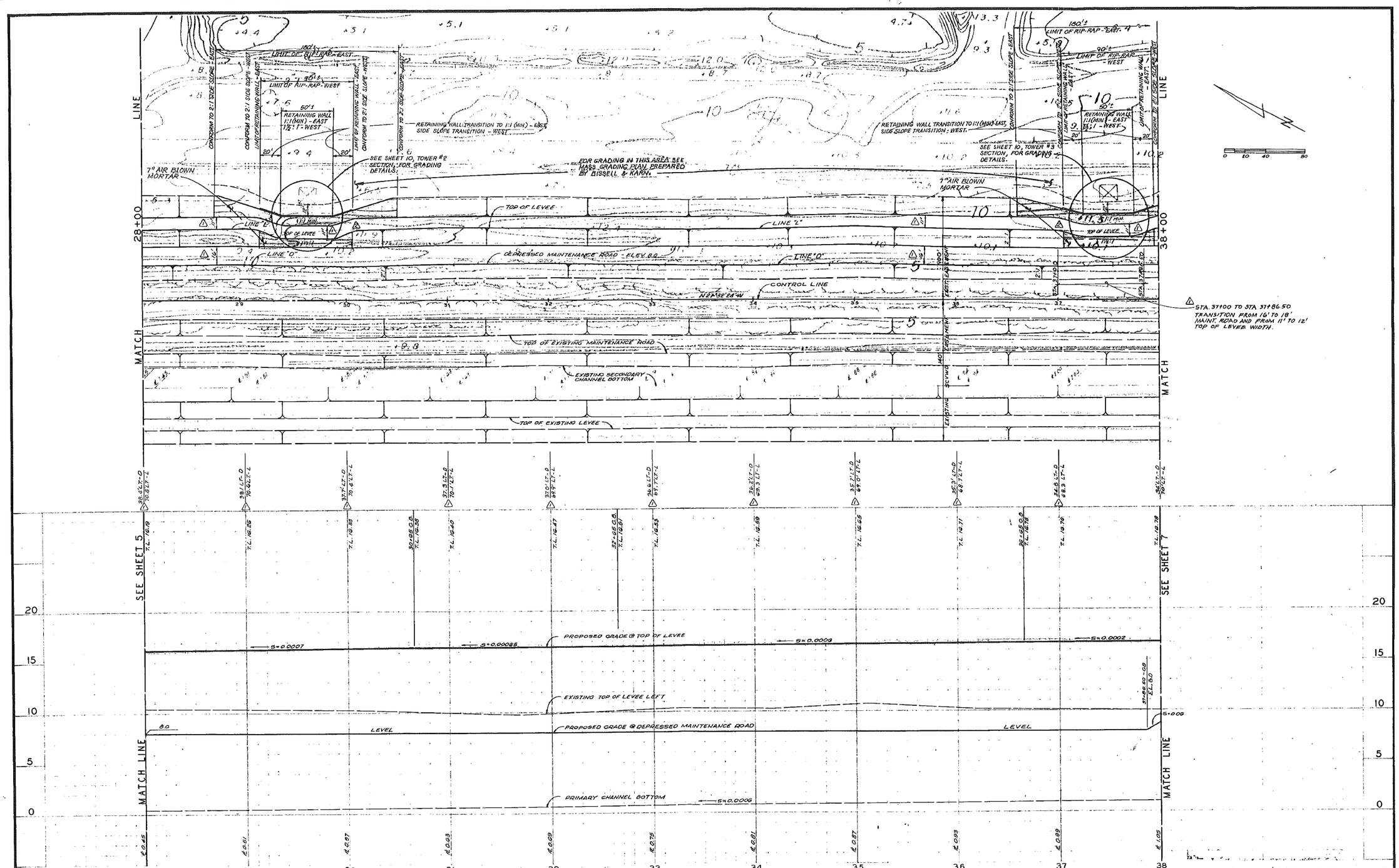

DATE: SEPTEMBER 1986				APPROVED BY: DATE: R.C.E.
SCALE: 1"=40'H, 1"=4'V.				APPROVED BY: DATE: R.C.E.
DESIGNED: APR				
DRAWN: DEE				
CHECKED: DCF, KS	△	5-8-89	LEVEE SLOPE PROTECTION @ PG&E TOWERS.	
PROJ. ENGR.: RJN	△	3-2-89	LEVEE & MAINT. ROAD WIDTH	
	BY	DATE	REVISIONS	

Reimer Associates

URBAN / ENVIRONMENTAL SYSTEMS ENGINEERS
120 Burlingame Office Center • 1633 Old Bayshore Highway
Burlingame, California • 94010 • (415) 692-1830

PLANS FOR THE IMPROVEMENT OF

LOWER PENITENCIA CREEK

MILPITAS, CALIFORNIA

SANTA CLARA_CA Work Maps
SANTA CLARA_CA0731

MICHAEL BAKER JR., INC. RECEIVED MAY 31 1990 ALEXANDRIA, VA.

SHEET 6 OF 11 SHEETS

JOB NO. 1063

2-754

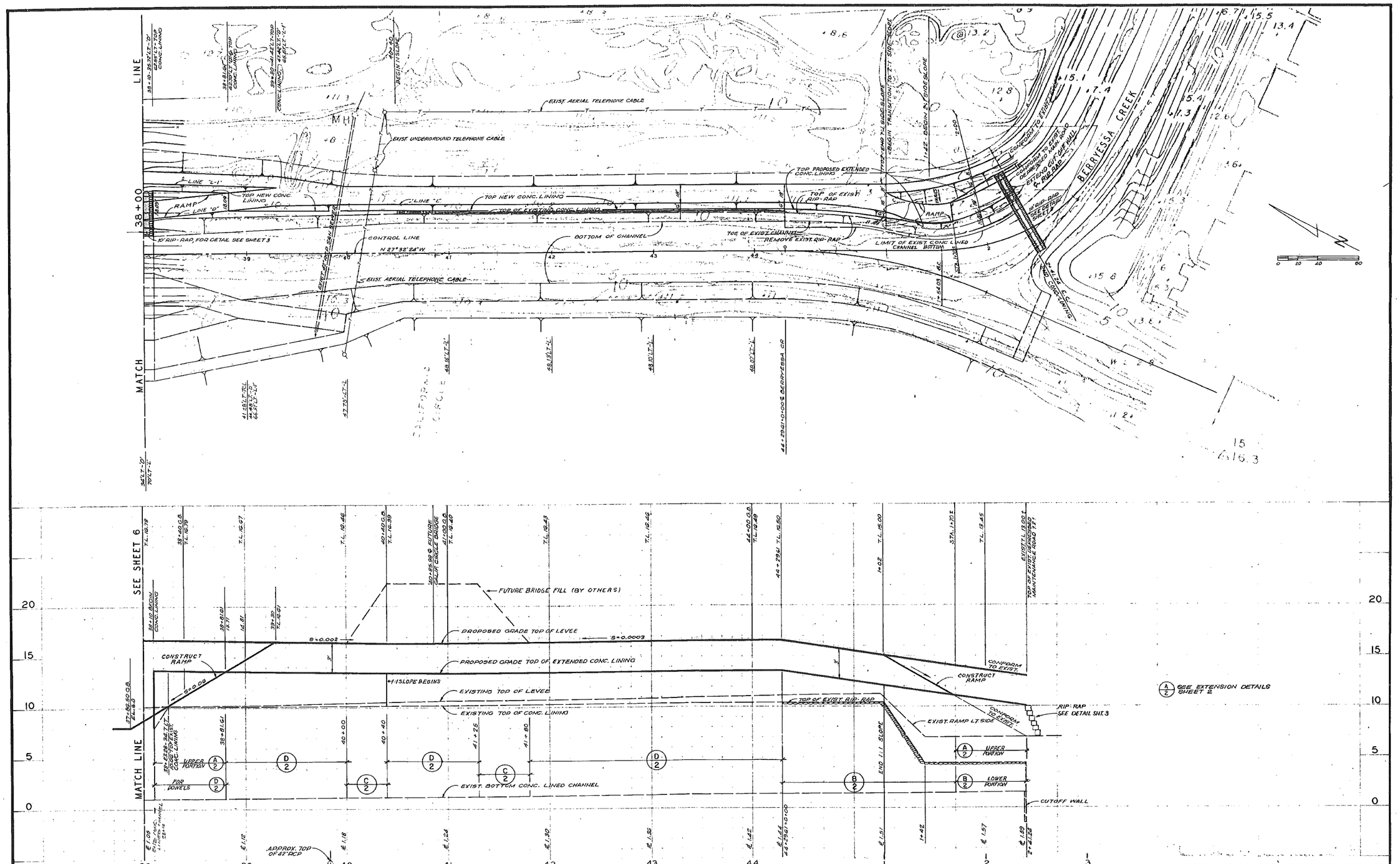

DATE: SEPTEMBER 1988				APPROVED BY: DATE: R.C.E.
SCALE: 1"=40'H, 1"=4'V				APPROVED BY: DATE: R.C.E.
DESIGNED: APR				
DRAWN: DEE				
CHECKED: DCF, KG				
PROJ. ENGR.: RJN	BY	DATE	REVISIONS	

Reimer Associates
URBAN / ENVIRONMENTAL SYSTEMS ENGINEERS
120 Burlingame Office Center • 1633 Old Bayshore Highway
Burlingame, California • 94010 • (415) 692-1830

PLANS FOR THE IMPROVEMENT OF

LOWER PENITENCIA CREEK

SANTA CLARA_CA Work Maps
SANTA CLARA_CA0732

MILPITAS, CALIFORNIA

SHEET 7 OF 11 SHEETS
JOB NO. 1063

MAY 31 1989

2-754

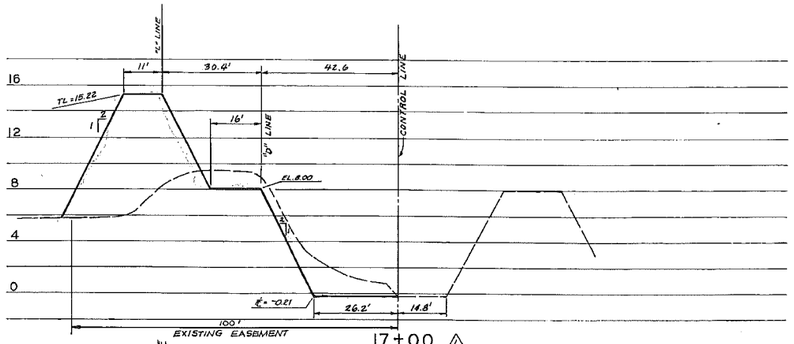

17+00 ⚠

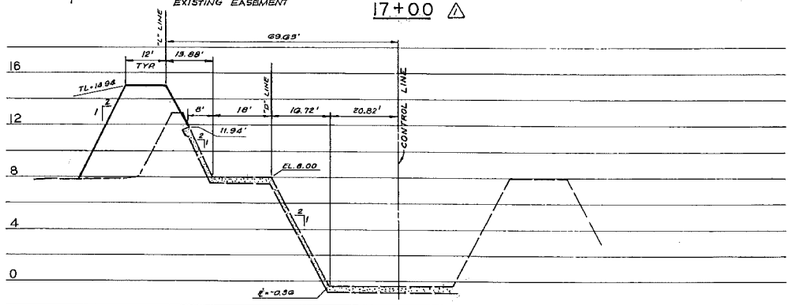

14+45

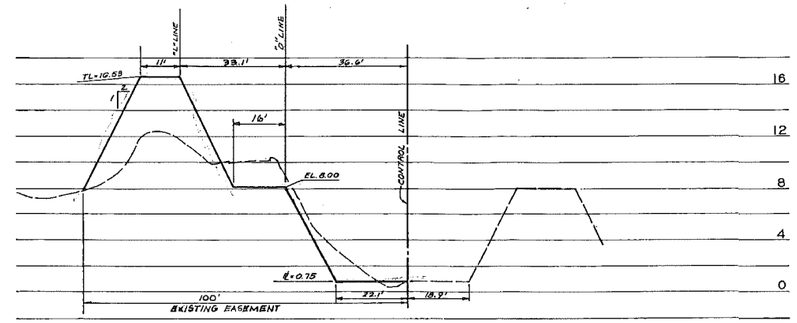

33+00 ⚠

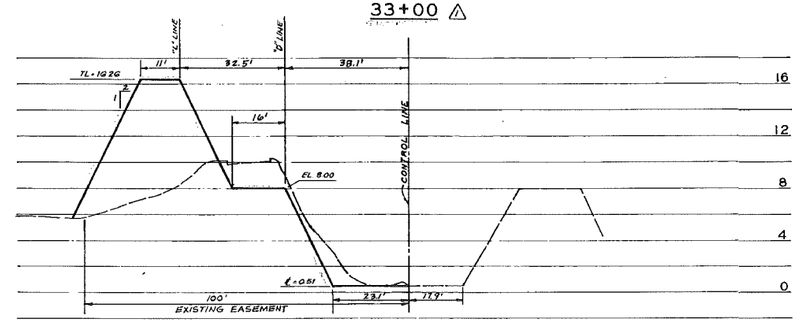

29+00 ⚠

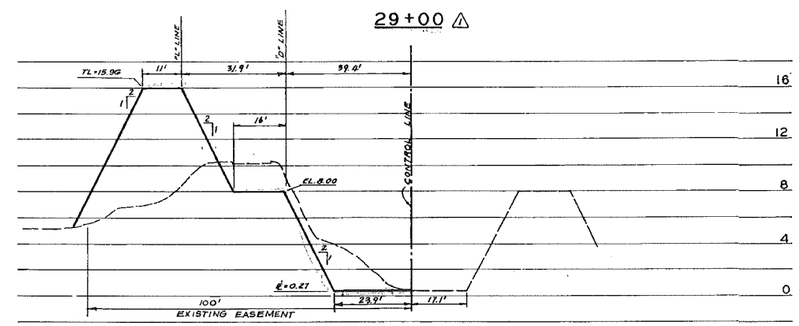

25+00 ⚠

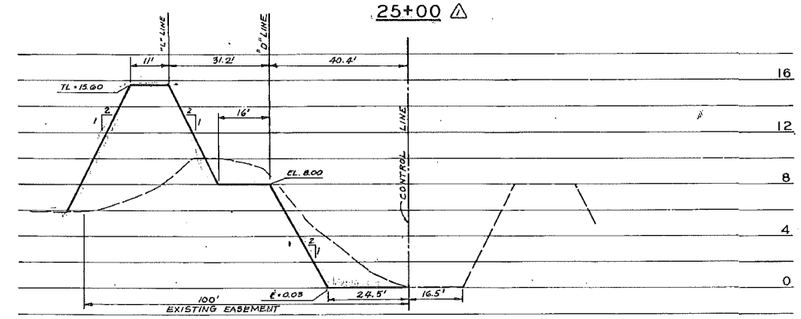

21+00 ⚠

NOTES: (TYPICAL ALL SECTIONS)

1. EXISTING CHANNEL TOPO SHOWN ON THESE CROSS-SECTIONS WAS BASED ON 1983 FIELD SURVEYS, ACTUAL CONDITIONS MAY VARY BASED ON CHANNEL MAINTENANCE OPERATIONS AND CHANNEL FLOWS SINCE THAT DATE.
2. LEVEE LOCATION AND TIES TO CONTROL LINE ARE BASED ON FIELD SURVEYS BY BISSELL & KARN, INC., DATED SEPTEMBER 2, 1988
3. NO THIN "SLIVER" FILLS ALLOWED ON THIS PROJECT.

DATE: SEPTEMBER 1988			
SCALE: 1"=20'H, 1"=5'V.			
DESIGNED: APR			
DRAWN: DEC			
CHECKED: DCF, KS			
PROJ. ENGR: RJN	⚠	3-2-89	GENERAL
	BY	DATE	REVISIONS

Reimer Associates
CIVIL / ENVIRONMENTAL SYSTEMS ENGINEERS • URBAN PLANNERS
1633 Old Bayshore Highway • Burlingame, California 94010 • (415) 692-1830

CROSS SECTIONS

LOWER PENITENCIA CREEK

MILPITAS, CALIFORNIA

SANTA CLARA_CA Work Maps
SANTA CLARA_CA0733

MICHAEL BAKER, JR. INC. RECEIVED MAY 31 1990 ALEXANDRIA, VA.

SHEET 8 OF 11 SHEETS
JOB NO. 1063

2-754

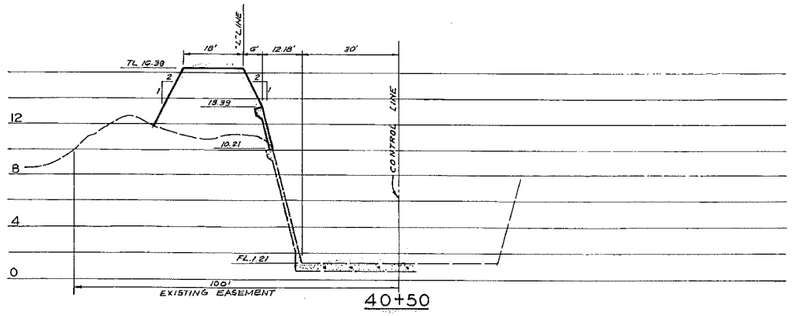

40+50

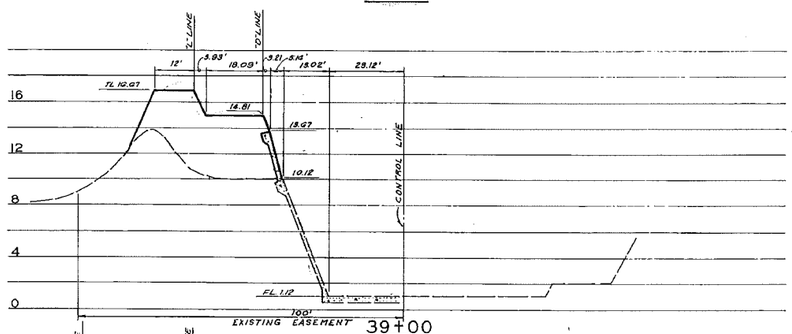

39+00

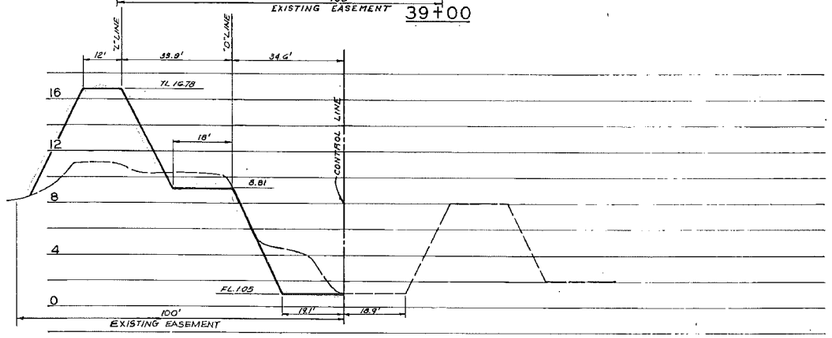

38+00

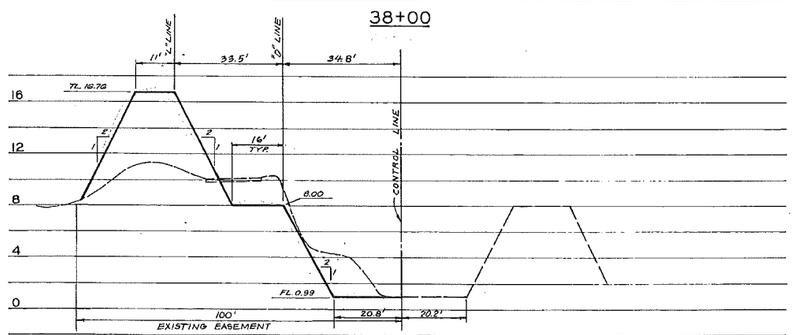

37+00 △1

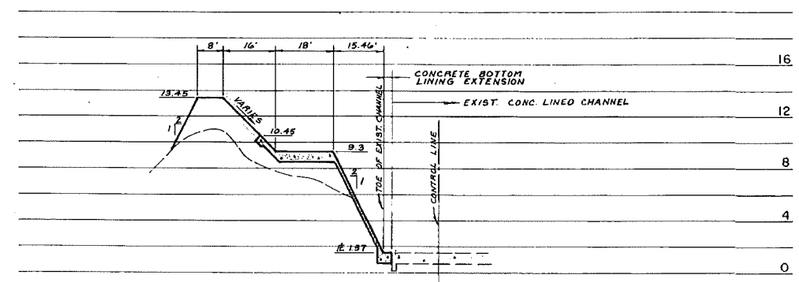

2+00 BERRYESSA CR.

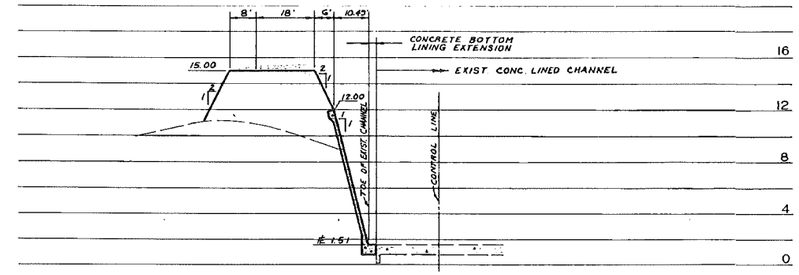

1+00 BERRYESSA CR.

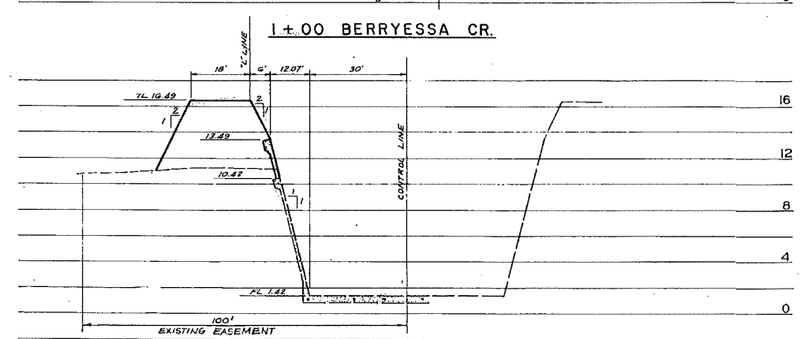

44+00

DATE: SEPTEMBER 1988			
SCALE: 1"=20'H 1"=5'V.			
DESIGNED: APR			
DRAWN: DEE			
CHECKED: DCF, KS			
PROJ. ENGR: RJN	△1	3-2-89	GENERAL - SECTION 37+00
	BY	DATE	REVISIONS

Reimer Associates
CIVIL / ENVIRONMENTAL SYSTEMS ENGINEERS • URBAN PLANNERS
1833 Old Bayshore Highway • Burlingame, California 94010 • (415) 692-1830

CROSS SECTIONS

LOWER PENITENCIA CREEK

MILPITAS, CALIFORNIA

SANTA CLARA_CA Work Maps
SANTA CLARA_CA0734

MICHAEL BAKER, JR., INC. RECEIVED MAY 31 1990 ALEXANDRIA, VA.

SHEET 9 OF 11 SHEETS
JOB NO. 1063

2-754

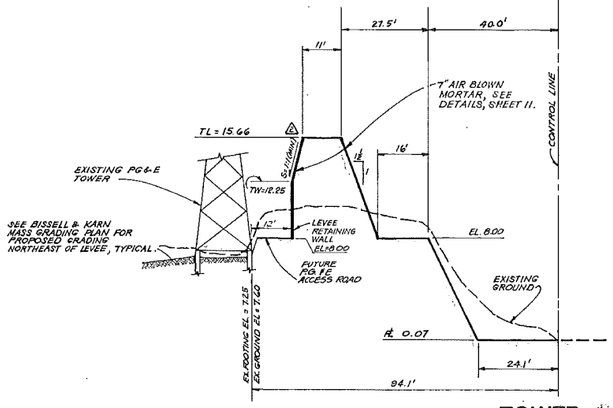

TOWER #1 △
SEE SHEET 6

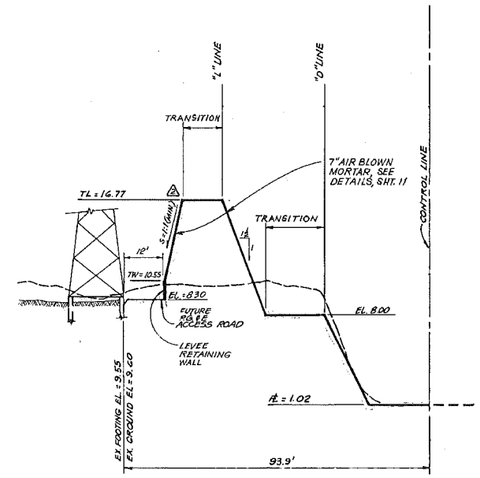

TOWER #3 △
SEE SHEET 6

(TRANSITION SECTION - FROM 16' TO 18' MAINT. ROAD AND 11' TO 12' TOP OF LEVEE WIDTH.)

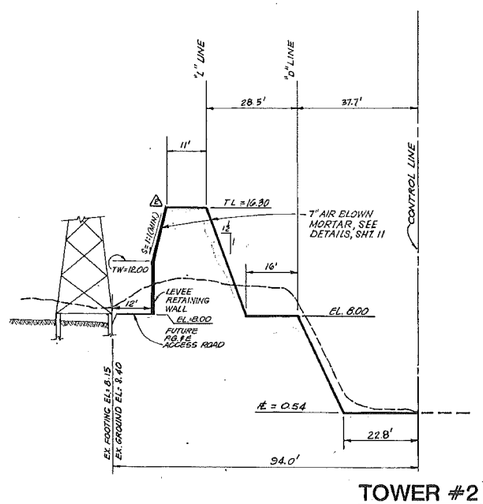

TOWER #2 △
SEE SHEET 6

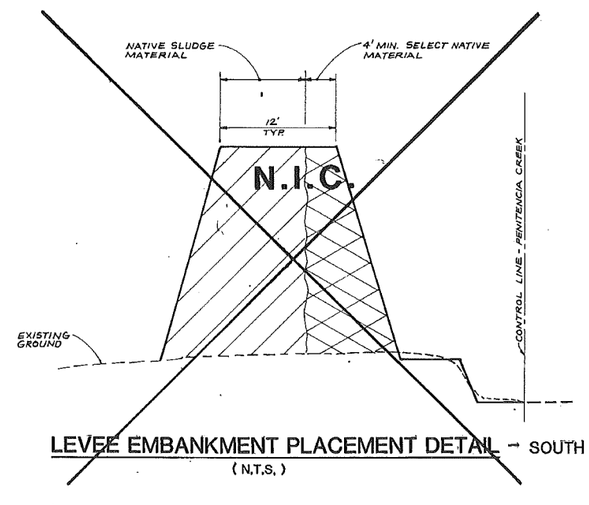

LEVEE EMBANKMENT PLACEMENT DETAIL → SOUTH OF SUNNYHILL OUTFALL (STA. 27+00±)
(N.T.S.)

NOTES:

FOR LEVEE RETAINING WALL DETAILS SEE SHEET 11

		BY	DATE	REVISIONS
DATE: SEPTEMBER 1988				
SCALE: 1"=20'H, 1"=5'V				
DESIGNED: KLS				
DRAWN: LSA				
CHECKED:	△		5-8-89	LEVEE SLOPE PROTECTION & PG&E TOWERS.
PROJ. ENGR: RJN	△		9-2-89	GENERAL

Reimer Associates
CIVIL ENGINEERS · LANDSCAPE ARCHITECTS · URBAN PLANNERS
601 Gateway Boulevard, Suite 600
South San Francisco, California 94080
(415) 871-7176
2600 Kitty Hawk Road
Livermore, California 94550
(415) 449-0230

CROSS SECTIONS
LOWER PENITENCIA CREEK
MILPITAS, CALIFORNIA

SANTA CLARA_CA Work Maps
SANTA CLARA_CA0735

SHEET 10 OF 11 SHEETS
JOB NO. 1063

2-754

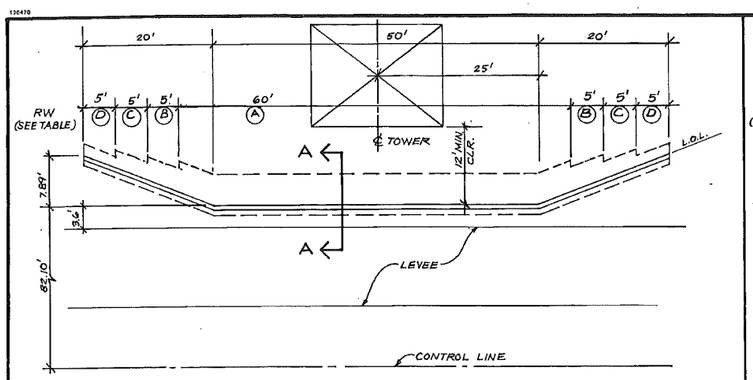

WALL PLAN @ TOWER #1

SCALE: 1"=10'

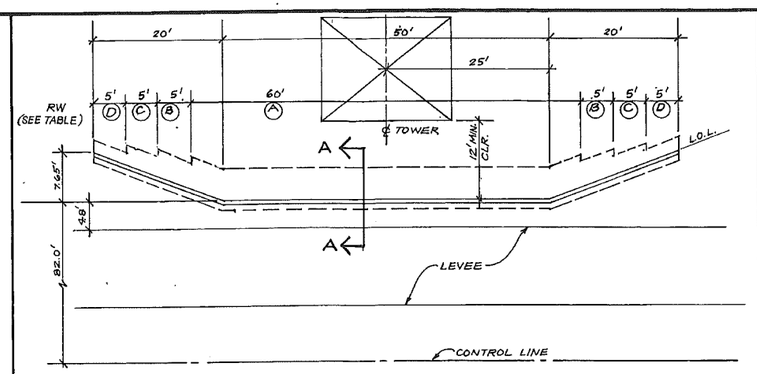

WALL PLAN @ TOWER #2

SCALE: 1"=10'

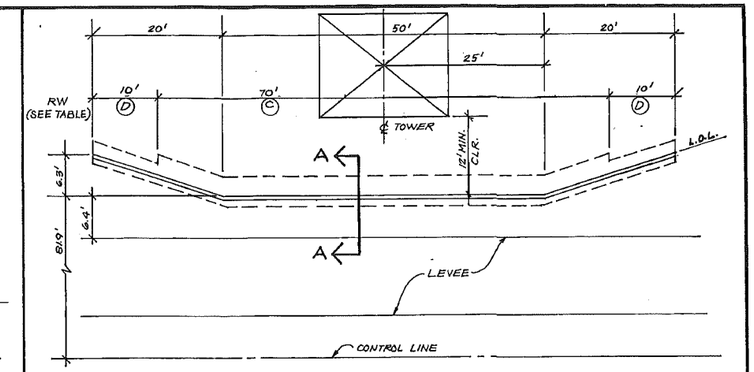

WALL PLAN @ TOWER #3

SCALE: 1"=10'

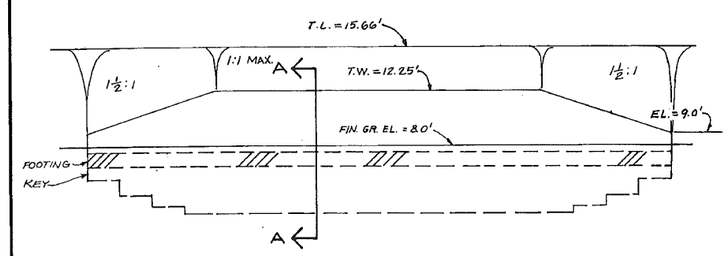

WALL ELEVATION @ TOWER #1

SCALE: HOR. 1"=10', VERT. 1"= 5'

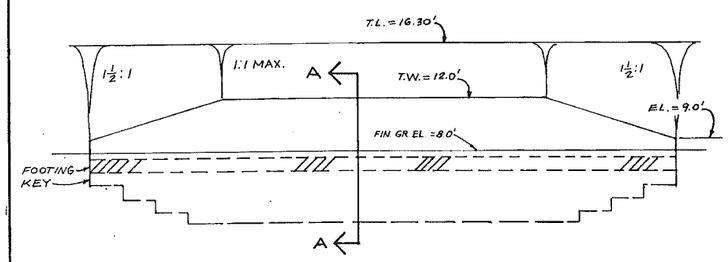

WALL ELEVATION @ TOWER #2

SCALE: HOR. 1"= 10', VERT. 1"= 5'

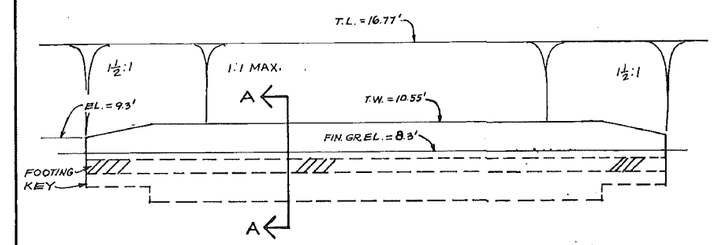

WALL ELEVATION @ TOWER #3

SCALE: HOR. 1"= 10', VERT. 1"= 5'

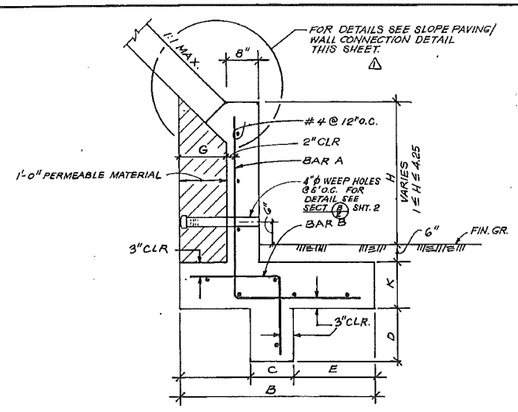

TYPICAL WALL SECTION A-A

NTS

RETAINING WALL SCHEDULE

RW	H (TW - FG)	B	C	D	E	K	G	BAR A	BAR B
A	3.25 ≤ H ≤ 5	6'-6"	12"	3'-9"	2'-0"	1'-0"	1'-0"	#5 @ 8"	#5 @ 12"
B	2.5 ≤ H < 3.25	5'-6"	12"	3'-0"	2'-0"	1'-0"	1'-0"	#5 @ 12"	#4 @ 12"
C	1.75 ≤ H < 2.5	4'-6"	12"	2'-3"	1'-0"	1'-0"	1'-0"	#4 @ 12"	#4 @ 18"
D	1 ≤ H < 1.75	3'-6"	12"	1'-0"	1'-0"	1'-0"	1'-0"	#4 @ 18"	#4 @ 18"

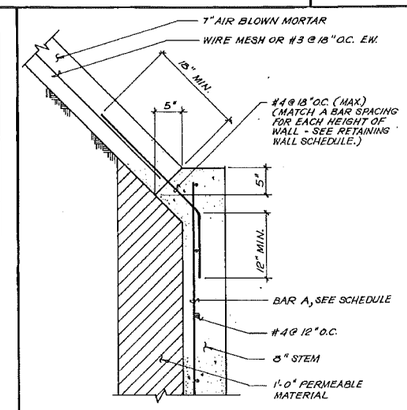

NOTE: SEE SECTION 72-6.01 & SECTION 53 STATE STD. SPECIFICATIONS.

SLOPE PAVING / WALL CONNECTION DETAIL

N.T.S.

GENERAL CONCRETE NOTES

1. Concrete shall have a minimum 28 day compressive strength (f'c) of 3000 psi.
2. Lap reinforcing bars 30 bar diameters at splices unless otherwise noted.
3. Concrete footings shall be poured against undisturbed earth that has been compacted and re-excavated for footings.
4. Reinforcing shall be new, deformed bars complying with ASTM 615 and shall be Grade 40 or 60.
5. Reinforcing shall be protected by the thickness of concrete indicated on the plans. Where not otherwise shown, the thickness of the concrete over the reinforcement shall be as follows:
   (1) Where concrete is deposited against ground without the use of forms, not less than 3 inches.
   (2) Where concrete may be exposed to the ground but is placed in forms, not less that 2 inches.
6. Construction joints not indicated on the plans shall be so made located as to least impair the strength of the structure. Where a joint is to be made, the surface of the concrete shall be thoroughly cleaned and all laitance removed.
7. Bottom of footing excavations shall be kept clear of slough and debris. Footing excavations shall also be kept moist and free of standing water before placement of concrete.
8. Retaining walls shall be fully backdrained. The backdrain shall be as shown on Typical Retaining Wall Section. Soil from the site is suitable for use as a backfill of retaining walls provided no rocks over 6 inches in size are included. The upper 1-foot of fill shall be compacted to shed surface water.

LEGEND:

T.L.-TOP OF LEVEE
T.W.-TOP OF WALL
L.O.L.- LAYOUT LINE (AT FACE OF WALL)
NTS- NOT TO SCALE

I CERTIFY THAT TI RETAINING WALL DESIGN WAS PREF UNDER MY SUPERVI

JAMES H. INGRAM
PRESIDENT RCE I INGRAM & ASSOC. INC.

EXPIRES 6/30/89

DATE: OCT. 17, 1988			
SCALE: AS SHOWN			
DESIGNED: JMC			
DRAWN: CA			
CHECKED: JHI			
PROJ. ENGR: JHI	1	5-8-89	SLOPE PAVING/WALL CONNECTION DETAIL.
	BY	DATE	REVISIONS

Reimer Associates
CIVIL ENGINEERS · LANDSCAPE ARCHITECTS · URBAN PLANNERS
601 Gateway Boulevard, Suite 600
South San Francisco, California 94080
(415) 871-7176
2600 Kitty Hawk Road
Livermore, California 94550
(415) 449-0230

PLANS PREPARED BY
INGRAM & ASSOCIATES INC.
184 MONTE VISTA LANE
DALY CITY, CA 94015
(415) 878-9197

RETAINING WALLS

LOWER PENITENCIA CREEK

MILPITAS, CALIFORNIA

RECEIVED MAY 31 1989 PROJECT DEVELOPMENT
SANTA CLARA_CA Work Maps ALEXANDRIA
SANTA CLARA_CA0736

SHEET 11 OF 11 SHEETS
JOB NO. 1063

Caltrans now has a web site! To get to the web site, go to: http://www.dot.ca.gov

Caltrans Metric

DIST	COUNTY	ROUTE	KILOMETER POST TOTAL PROJECT	SHEET No	TOTAL SHEETS
04	SCl, Ala	880	15.3/16.9, R0.0/R0.7	418	495

REGISTERED CIVIL ENGINEER

3-5-01

PLANS APPROVAL DATE

REGISTERED PROFESSIONAL ENGINEER — Lugi Yang — No. 049908 — Exp. 09-30-04 — CIVIL — STATE OF CALIFORNIA

The State of California or its officers or agents shall not be responsible for the accuracy or completeness of electronic copies of this plan sheet.

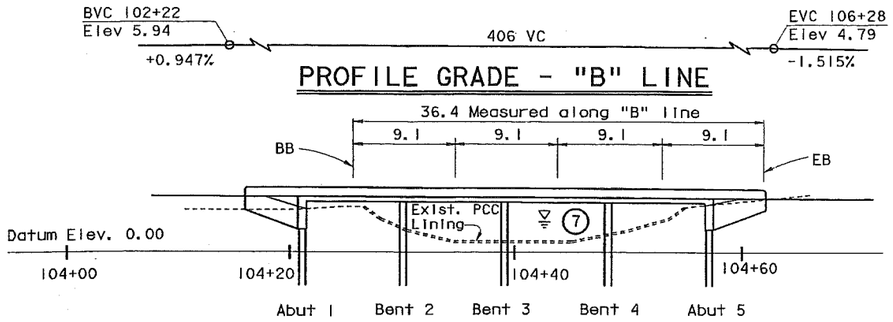

PROFILE GRADE - "B" LINE

ELEVATION

1:250

STANDARD PLANS DATED JULY, 1999

A62C	Limits of Payment for Excavation and Backfill-Bridge
A76A	Concrete Barrier Type 60A
B0-1	Bridge Details
B0-3	Bridge Details
B0-5	Bridge Details
B2-6	Pile Details-Class 400C And Class 625C
B6-10	Utility Openings-T Beam
B6-21	Joint Seals
B11-53	Concrete Barrier Type 25
B14-3	Communication and sprinkler control conduits
B14-4	Water supply line (Bridge)
B14-5	Water supply line (Detail)

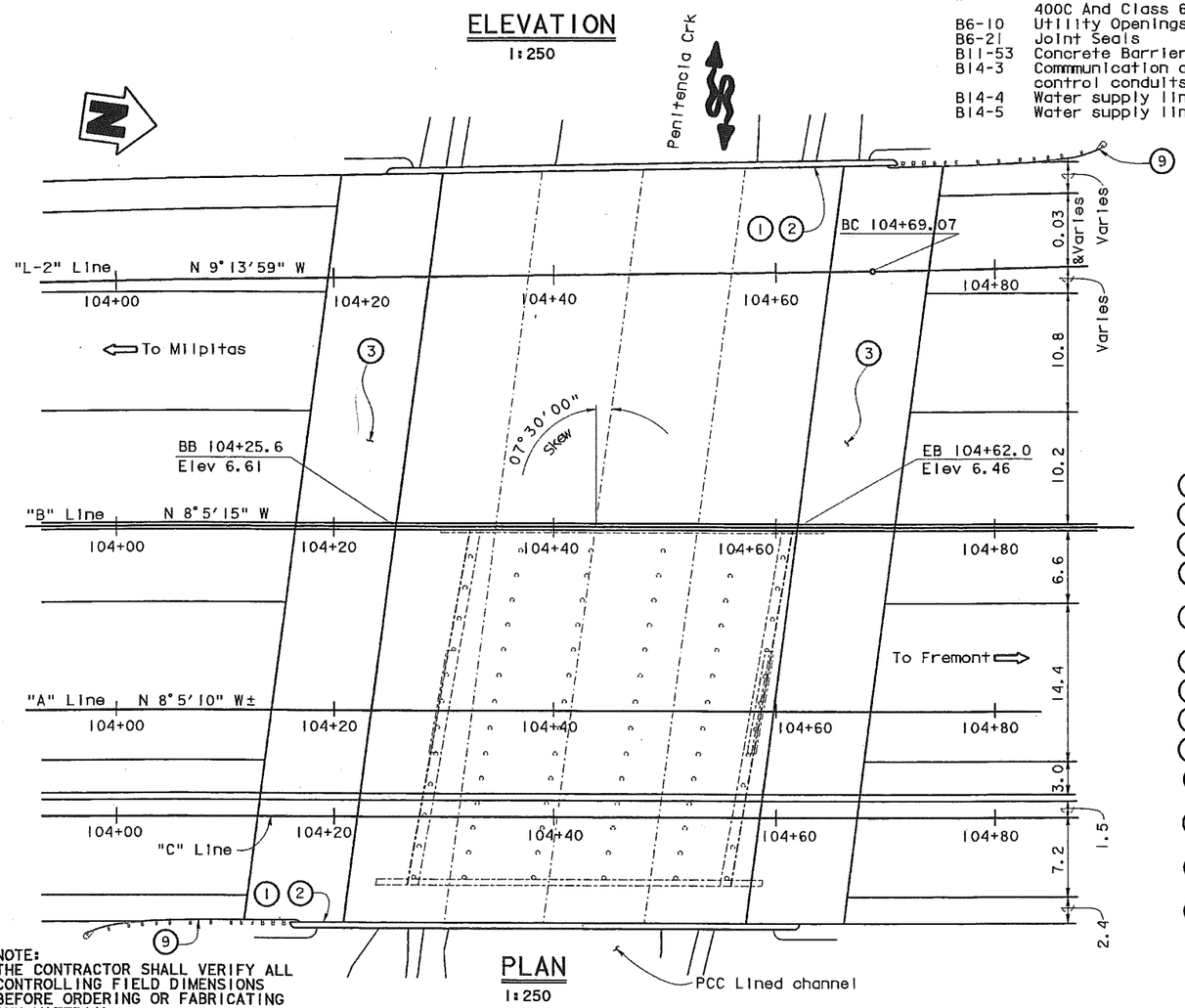

PLAN

1:250

NOTE:
THE CONTRACTOR SHALL VERIFY ALL CONTROLLING FIELD DIMENSIONS BEFORE ORDERING OR FABRICATING ANY MATERIAL.

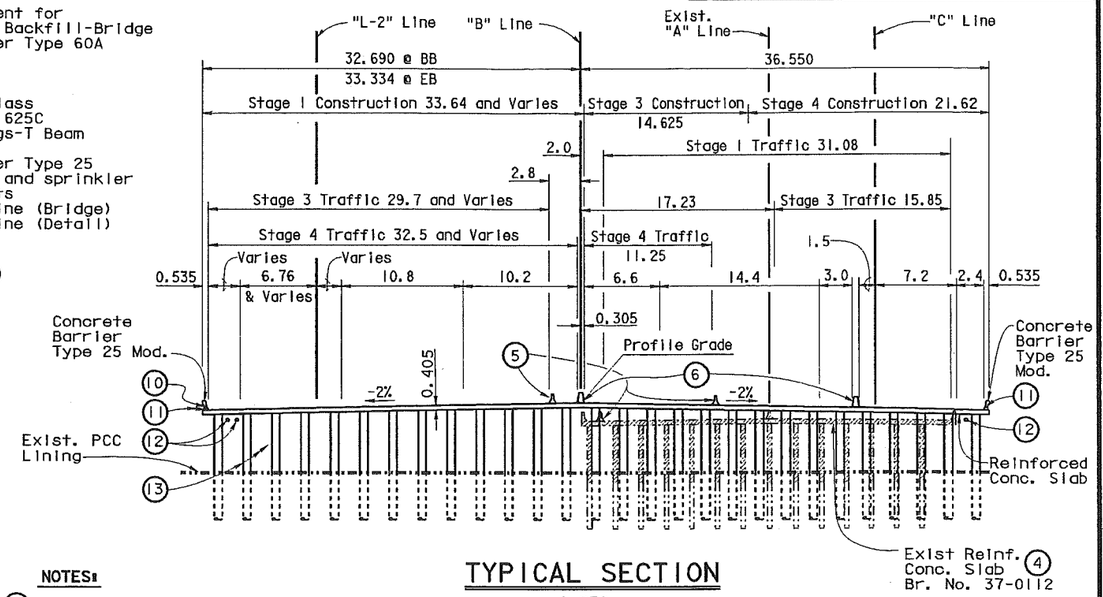

TYPICAL SECTION

1:250

NOTES:

1. Paint "Penitencia Creek Br."
2. Paint "Bridge No. 37-0582"
3. Approach slab type N (9D)
4. Remove existing bridge, see "Typical Section And Bent Details No. 2" sheets for stage removal
5. Temporary K rail, see "Road Plans"; for attachments, see "Abutment Details No. 1" sheet
6. Concrete barrier type 60A
7. For hydrologic data, see "Foundation Plan"
8. Not used
9. For MBGR, see "Road Plans"
10. 40 mm ø electrical conduit B14-3, see "Road Plans"
11. 50 mm ø PVC sprinkler control conduit B14-3, see "Road Plans"
12. 75 mm ø GSP water supply line B14-4,
13. 610 mm ø open end CISS pile

For pile data, see "Abutment Details No. 2" sheet.
For general notes, see "Deck Contours" sheet.
For construction and traffic staging, see "Road Plans".
For quantities, see "Deck Contour" sheet.

INDEX TO PLANS

SHEET NO	TITLE
1	General Plan
2	Deck Contours
3	Foundation Plan
4	Abutment Details No. 1
5	Abutment Details No. 2
6	Typical Section and Bent Details No. 1
7	Typical Section and Bent Details No. 2
8	Top Slab Reinforcement Layout No. 1
9	Top Slab Reinforcement Layout No. 2
10	Bottom Slab Reinforcement Layout No. 1
11	Bottom Slab Reinforcement Layout No. 2
12	Pile Details
13	Slab Reinforcement Details
14	Structure Approach Type N(9D)
15	Structure Approach Drainage Details
16	Log of Test Borings 1 Of 4
17	Log of Test Borings 2 Of 4
18	Log of Test Borings 3 Of 4
19	Log of Test Borings 4 Of 4

Indicates Bridge Removal

Standard plan sheet No.

Detail No.

ALL DIMENSIONS ARE IN METERS UNLESS OTHERWISE SHOWN

DESIGN ENGINEER	DESIGN	BY Heather Goronea	CHECKED Javid Sharifi	LOAD FACTOR DESIGN	LIVE LOADING: HS20-44 AND ALTERNATIVE AND PERMIT DESIGN LOAD
	DETAILS	BY Ton Doan	CHECKED Javid Sharifi	LAYOUT	BY Heather Goronea / CHECKED Javid Sharifi
	QUANTITIES	BY Javid Sharifi	CHECKED Fayek Tannous	SPECIFICATIONS	BY Ken Darby/Simona Dollaga / PLANS AND SPECS COMPARED

STATE OF CALIFORNIA
DEPARTMENT OF TRANSPORTATION

DIVISION OF STRUCTURES
STRUCTURE DESIGN 12

BRIDGE NO. 37-0582
KILOMETER POST 16.7

PENITENCIA CREEK BRIDGE (REPLACE)

GENERAL PLAN

CU 04
EA 285521

DISREGARD PRINTS BEARING EARLIER REVISION DATES

REVISION DATES (PRELIMINARY STAGE ONLY) 05-14-98 05-27-98 05-29-98 06-11-98 06-18-98 01-21-99 02-14-00 02-18-00 02-22-00 05-16-00

SHEET 1 OF 19

STRUCTURES DESIGN GENERAL PLAN SHEET (METRIC) (REV.3/1/99)

ORIGINAL SCALE IN MILLIMETERS FOR REDUCED PLANS 0 10 20 30 40 50 60 70 80 90 100

FILE => aogp0.dgn

USERNAME => trolew DATE PLOTTED => 21-MAR-2001 TIME PLOTTED => 10:37

Caltrans now has a web site! To get to the web site, go to: http://www.dot.ca.gov

F-341 (10)

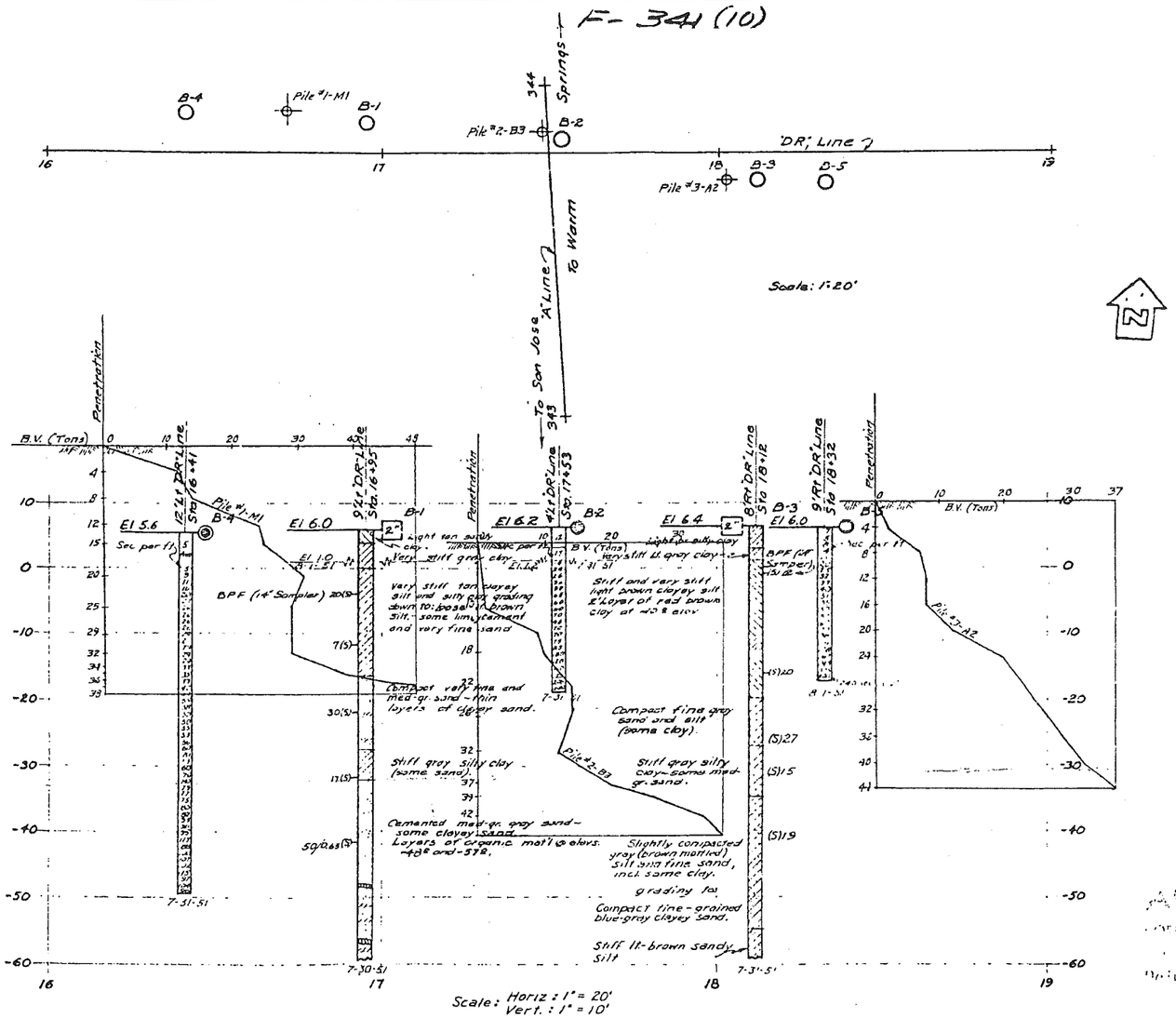

B.M. "A"
Chiselled □ in NW cor. of N.W concr. footing of the HT tower #4/34 – 700' Rt. of "A" 347+03 P.O.T (Approx).
Elev = 5.906

I.B.M. 8.34
V.S. 8.30.34

Upper Elev.

GEOTECHNICAL BRANCH - TRANSPORTATION LABORATORY

PENITENCIA CREEK BRIDGE (WIDEN)

LOG OF TEST BORINGS 3OF3

CU: 04
EA: 112820
BRIDGE No. 37-112

39499

REGISTERED GEOLOGIST R.C. WILHELMS No. 1719 Exp. 6/30/88 STATE OF CALIFORNIA

NOTES:

1. "D" line, metric intersection
   Existing "A" Line, "D" 5+38.074± / "A" 105+03.213±
   "DR1" line, metric intersection
   Existing "A" Line, "DR1" 5+33.633± / "A" 104+78.918±
   Bearing, "DR1" Line N 85°33'42" E
2. The equivalent metric line stationing is:

BORING	STATION	OFFSET FROM "D" LINE
B-1	5+25 ±	22.2 m Rt±
B-2	5+39 ±	22.7 m Rt±
B-3	5+59 ±	25.4 m Rt±
B-4	5+10 ±	23.8 m Rt±
B-5	5+65 ±	25.7 m Rt±

To accompany plans dated 3-5-01

STRUCTURAL FOUNDATIONS BRANCH - ENGINEERING SERVICE CENTER

As-Built Log of Test Borings sheet is considered an informational document only. As such, the State of California registration seal with signature, license number and registration certificate expiration date confirm that this is a true and accurate copy of the original document. It does not attest to the accuracy or validity of the information contained in the original document. This drawing is available and presented only for the convenience of any bidder, contractor or other interested party.

DIST.	COUNTY	ROUTE	KILOMETER POST - TOTAL PROJECT	Sheet No.	Total Sheets
04	SCl, Alg	880	15.3/16.9, R0.0/R0.7	417	495

REGISTERED GEOLOGIST

REGISTERED GEOLOGIST M. RICHARDS No. 5240 Exp. 7-31-00 STATE OF CALIFORNIA

DIXON LANDING OVERCROSSING (REPLACE)

LOG OF TEST BORINGS 8 OF 8

NOTE: A COPY OF THIS LOG OF TEST BORINGS IS AVAILABLE AT OFFICE OF STRUCTURE MAINTENANCE AND INVESTIGATIONS, SACRAMENTO, CALIFORNIA

CU: 04 285521
EA: 443233
BRIDGE No. 37-0581

NOTE: Relative rates of penetration obtained as follows:
B-1 & B-3 (blows per foot): Driving 1.4" sampler with 140 lb hammer & 30" free fall.
B-2 J.E.S. (seconds per foot): Driving Penetrometer or "A" Rod with No 2 McKiernan-Terry air hammer @ 115 psi gage pressure.

AS BUILT
CORRECTIONS BY R. Colley
53-41023
DATE 5-3-54
DEC 13 1979 ASC

CLASSIFICATION OF MATERIAL BASED ON STANDARD GRADE SIZE LIMITS

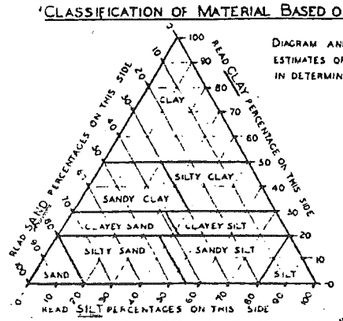

DIAGRAM AND TABLE SHOWING THE BASIS FOR ESTIMATES OF GRADE SIZE DISTRIBUTION USED IN DETERMINATION OF CLASS NAMES.

GROUPING USED IN TRIANGULAR CLASSIFICATION			
CLASS NAME	PERCENTAGE OF SIZES PRESENT		
	SAND	SILT	CLAY
SAND	80-100	0-20	0-20
SILTY SAND	45-80	0-55	0-20
SANDY SILT	0-45	55-80	0-20
SILT	0-20	80-100	0-20
CLAYEY SAND	38-80	0-42	20-30
CLAYEY SILT	0-38	42-80	20-30
SANDY CLAY	50-70	0-40	30-50
SILTY CLAY	0-30	20-70	30-50
CLAY	0-30	0-30	50-100

IF GRAVEL IS PRESENT IN APPRECIABLE AMOUNTS THE TERM "GRAVELLY" MAY BE ADDED TO THE CLASS NAME, SAY "GRAVELLY SAND". THE TERMS "COARSE", "MEDIUM" AND "FINE" WHEN USED TO DESCRIBE GRAVEL, SAND AND SILT REFER TO STANDARD GRADE SIZE LIMITS

LEGEND OF BORING OPERATIONS

- PLAN OF ANY BORING
- 1" SAMPLER BORING
- ROTARY WASH BORING
- 1" CLOSED SAMPLER DRIVEN
- CORE BORING
- 2½" PENETROMETER DRIVEN
- 1⅜" SAMPLER BORING
- 2" OR 3" AUGER BORING
- 6" OR 20" AUGER BORING
- CASING DRIVEN
- JET BORING
- (S) SAMPLE TAKEN
- 1⅜" A-ROD DRIVEN

THE APPROPRIATE BORING SYMBOLS DESIGNATING THE METHOD OF OPERATION ARE SHOWN AT THE UPPER RIGHT-HAND CORNER OF THE RESPECTIVE BORING WHERE TOOL CHANGES WERE MADE DURING THE BORING OPERATION. SYMBOLS ARE SHOWN AT THE POINT OF CHANGE.

LEGEND OF EARTH MATERIALS

- GRAVEL – G
- SAND – S
- SILT – SI
- CLAY – C
- SILTY SAND – SI S
- CLAYEY SAND – C S
- SANDY SILT – S SI
- CLAYEY SILT – C SI
- SANDY CLAY – S C
- SILTY CLAY – SI C
- PEAT and/or ORGANIC CLAY – O
- SANDSTONE – SS
- SHALE – SH
- BROKEN ROCK (FRAGMENTS) – BR
- ROCK – R
- FILL MATERIAL

ABBREVIATIONS

El 69.4	ELEVATION OF GROUND AT TEST HOLE
bpf	BLOWS PER FOOT – (SEE NOTE ABOVE)
P	PULLED PIPE
M	MOISTURE AS % DRY WEIGHT
El 6.4 ▽ 8-12-80	ELEVATION OF GROUND WATER AND DATE

NOTES

THE CONTRACTOR'S ATTENTION IS DIRECTED TO SECTION 2, ARTICLE (c) OF THE STANDARD SPECIFICATIONS AND TO THE SPECIAL PROVISIONS ACCOMPANYING THIS SET OF PLANS

CLASSIFICATION OF EARTH MATERIAL AS SHOWN ON THIS SHEET IS BASED UPON FIELD INSPECTION AND IS NOT TO BE CONSTRUED TO IMPLY MECHANICAL ANALYSIS.

DIXON ROAD OVERCROSSING
LOG OF TEST BORINGS

SHEET	OF
34	34

SCALE AS SHOWN
37-110

br370581#08of08.tif

DIST	COUNTY	ROUTE	KILOMETER POST TOTAL PROJECT	SHEET No	TOTAL SHEETS
04	SCl, Ala	880	15.3/16.9, R0.0/R0.7	419	495

Lucy Yang
REGISTERED CIVIL ENGINEER

3-5-01
PLANS APPROVAL DATE

REGISTERED PROFESSIONAL ENGINEER Lucy Yang No. 049908 Exp. 09-30-04 CIVIL STATE OF CALIFORNIA

The State of California or its officers or agents shall not be responsible for the accuracy or completeness of electronic copies of this plan sheet.

Caltrans now has a web site! To get to the web site, go to: http://www.dot.ca.gov

Caltrans Metric

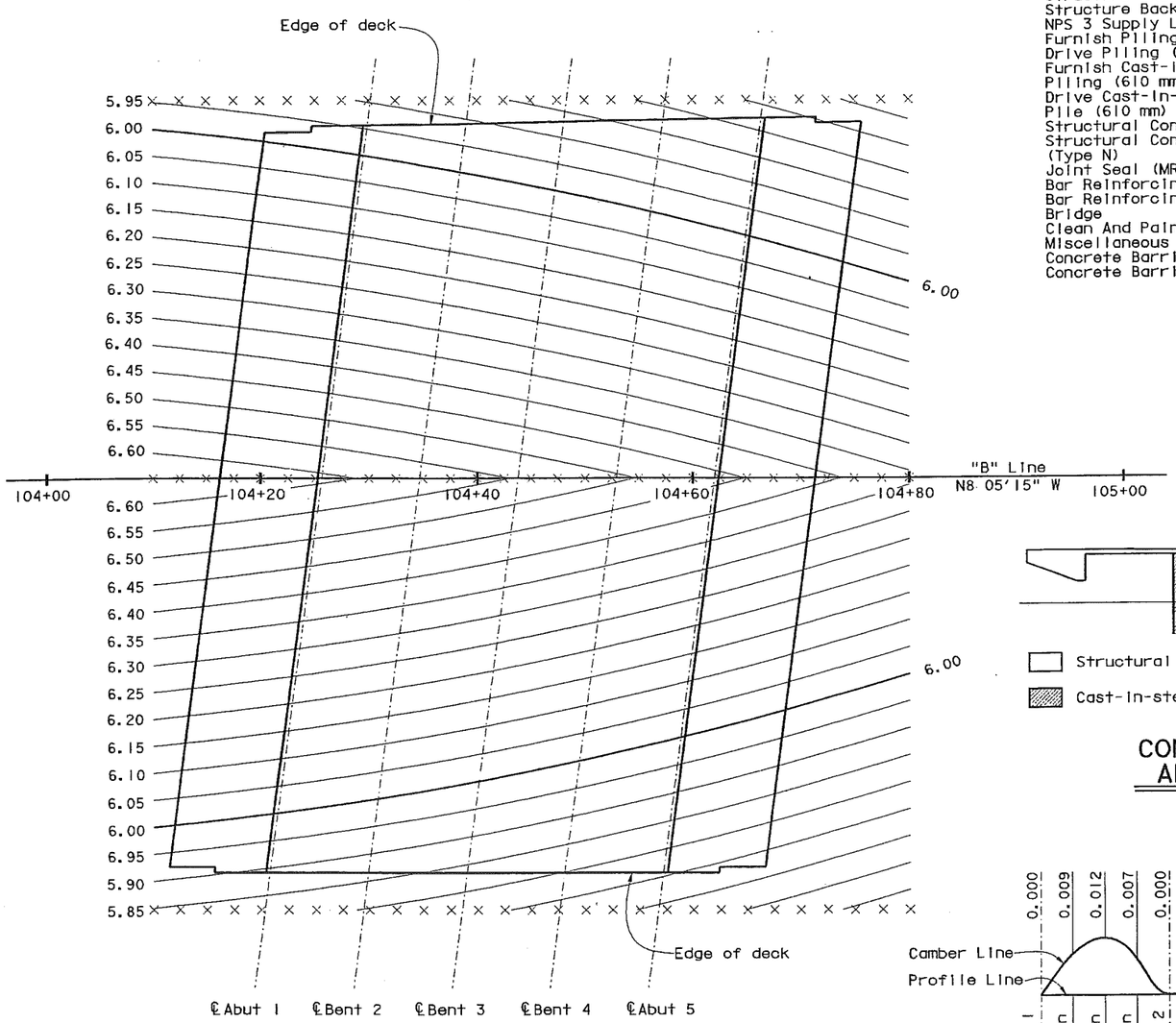

NOTES:

× Indicates 2.5 m intervals along station line

Contours interval = 0.05 m. Contours do not include camber

PLAN
1:250

QUANTITIES

Bridge Removal, Location B	Lump Sum
Structure Excavation (Bridge)	270 m^3
Structure Backfill (Bridge)	175 m^3
NPS 3 Supply Line (Bridge)	150 m
Furnish Piling (Class 625C) (Alt X)	1163 m
Drive Piling (Class 625C) (Alt X)	50 ea
Furnish Cast-in-Steel-Shell Concrete Piling (610 mm)	2080 m
Drive Cast-in-Steel-Shell Concrete Pile (610 mm)	84 ea
Structural Concrete, Bridge	1935 m^3
Structural Concrete, Approach Slab (Type N)	376 m^3
Joint Seal (MR=15 mm)	140 m
Bar Reinforcing Steel (Bridge)	202 500 kg
Bar Reinforcing Steel (Epoxy Coated) Bridge	1570 kg
Clean And Paint Steel Piling	Lump Sum
Miscellaneous Metal (Bridge)	224 kg
Concrete Barrier (Type 25 Modified)	92 m
Concrete Barrier (Type 60A)	109 m

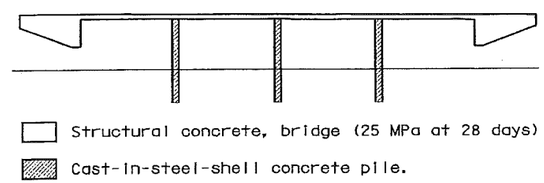

CONCRETE STRENGTH AND TYPE LIMITS
1:250

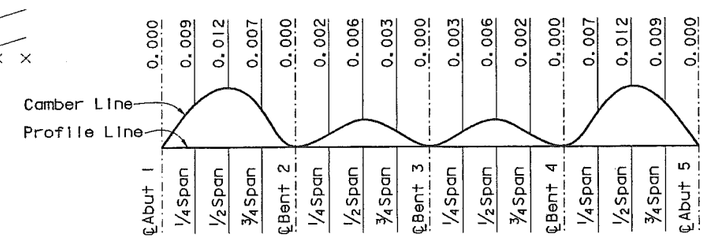

Does not include allowance for falsework settlement

CAMBER DIAGRAM
NO SCALE

SEISMIC SITE SPECIFIC ARS CURVE

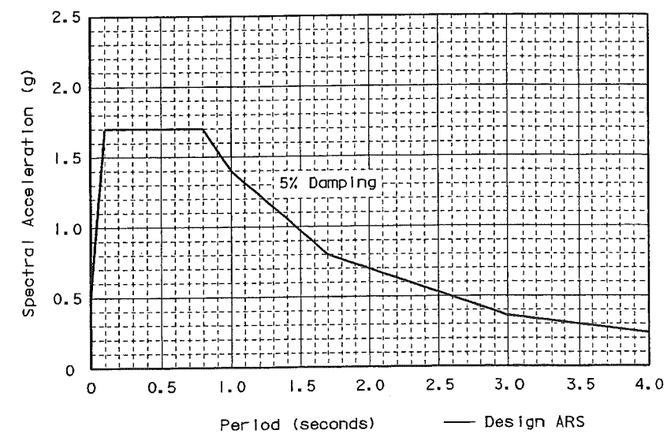

GENERAL NOTES
LOAD FACTOR DESIGN

DESIGN: BRIDGE DESIGN SPECIFICATIONS (1983 AASHTO with Interims and Revisions by CALTRANS)

DEAD LOAD: Includes 1.67 Kpa for future wearing surface.

LIVE LOADING: HS20-44 and alternative and permit design load.

SEISMIC LOADING: See "Seismic Site Specific ARS Curve"

REINFORCED CONCRETE:

f_y = 420 Mpa

f'_c = 25 Mpa

n = 8

Transverse Deck Slabs (Working Stress Design)

f_s = 138 Mpa

f_c = 8.3 Mpa

n = 8

ALL DIMENSIONS ARE IN METERS UNLESS OTHERWISE SHOWN

DESIGN	BY Heather Goronea	CHECKED David Sharifi
DETAILS	BY Ton Doan	CHECKED David Sharifi
QUANTITIES	BY David Sharifi	CHECKED Fayek Tannous

STATE OF CALIFORNIA
DEPARTMENT OF TRANSPORTATION

DIVISION OF STRUCTURES
STRUCTURE DESIGN 12

BRIDGE NO. 37-0582
KILOMETER POST 16.7

PENITENCIA CREEK BRIDGE (REPLACE)
DECK CONTOURS

STRUCTURES DESIGN DETAIL SHEET (METRIC) (REV. 9/2/98)

ORIGINAL SCALE IN MILLIMETERS FOR REDUCED PLANS 0 10 20 30 40 50 60 70 80 90 100

CU 04
EA 285521

FILE => abdck.dgn

DISREGARD PRINTS BEARING EARLIER REVISION DATES

REVISION DATES (PRELIMINARY STAGE ONLY) 2-16-99 02-14-00 02-18-00 02-22-00 05-14-00 01-26-01

SHEET 2 OF 19

USERNAME => trcolew DATE PLOTTED => 21-MAR-2001 TIME PLOTTED => 10:37

DIST.	COUNTY	ROUTE	KILOMETER POST TOTAL PROJECT	SHEET NO.	TOTAL SHEETS
04	SCI, Ala	880	15.3/16.9, R0.0/R0.7	420	495

Caltrans Metric

REGISTERED ENGINEER - CIVIL

3-5-01

PLANS APPROVAL DATE

REGISTERED PROFESSIONAL ENGINEER — Lucy Yang — No. 049908 — Exp. 09-30-04 — CIVIL — STATE OF CALIFORNIA

The State of California or its officers or agents shall not be responsible for the accuracy or completeness of electronic copies of this plan sheet.

Caltrans now has a web site! To get to the web site, go to: http://www.dot.ca.gov

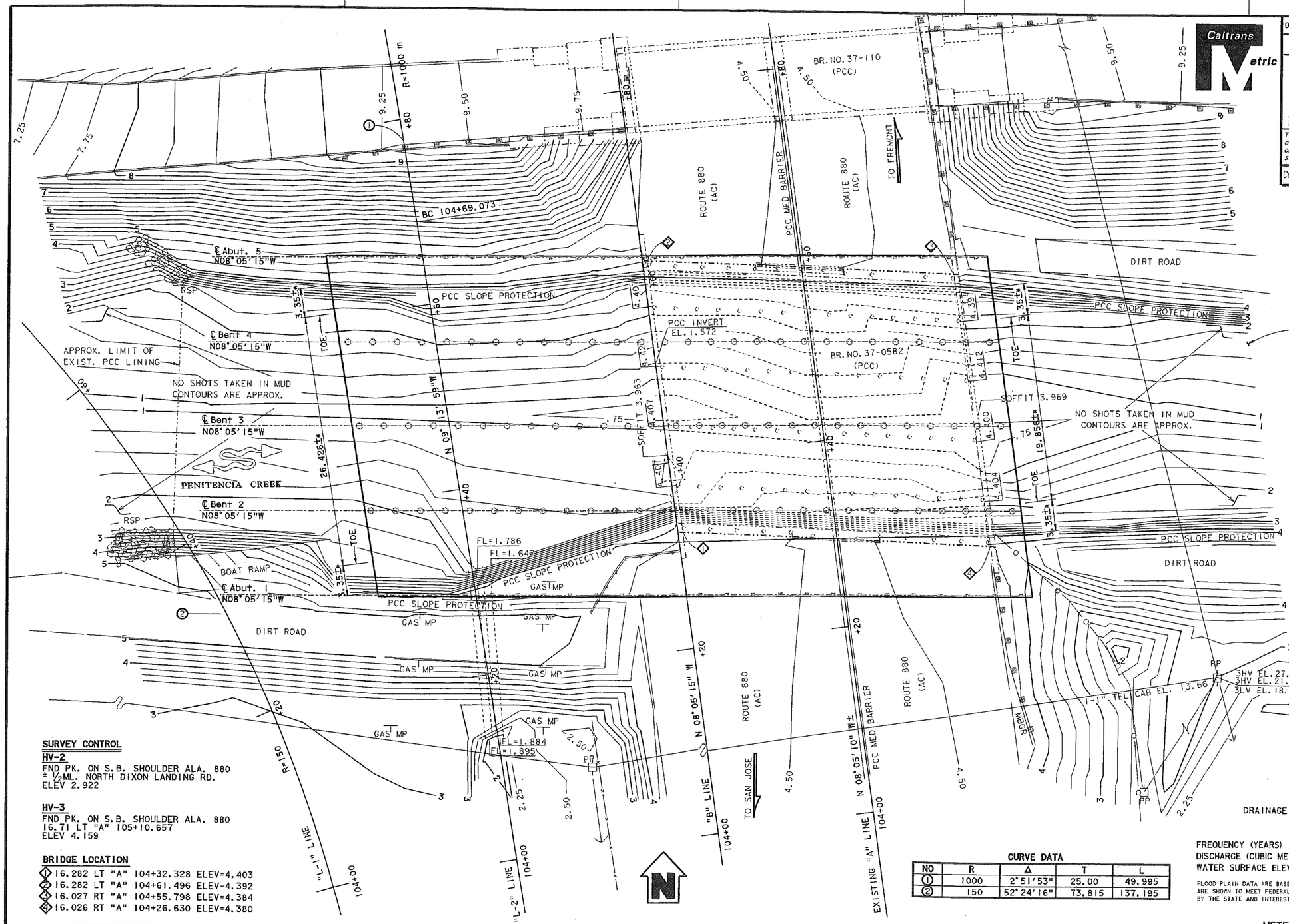

Location	Centerline "B" Line Station	Centerline Bearing
Abut 1	Sta. 104+25.6	N 08° 05' 15" W
Bent 2	Sta. 104+34.7	N 08° 05' 15" W
Bent 3	Sta. 104+43.8	N 08° 05' 15" W
Bent 4	Sta. 104+52.9	N 08° 05' 15" W
Abut 5	Sta. 104+62.0	N 08° 05' 15" W

NOTE:

* APPROXIMATE LIMITS OF PCC SLOPE PROTECTION AND PCC LINING AT EDGE OF DECK

SURVEY CONTROL

HV-2
FND PK. ON S.B. SHOULDER ALA. 880
± 1/2ML. NORTH DIXON LANDING RD.
ELEV 2.922

HV-3
FND PK. ON S.B. SHOULDER ALA. 880
16.71 LT "A" 105+10.657
ELEV 4.159

BRIDGE LOCATION

1. 16.282 LT "A" 104+32.328 ELEV=4.403
2. 16.282 LT "A" 104+61.496 ELEV=4.392
3. 16.027 RT "A" 104+55.798 ELEV=4.384
4. 16.026 RT "A" 104+26.630 ELEV=4.380

CURVE DATA

NO	R	Δ	T	L
1	1000	2°51'53"	25.00	49.995
2	150	52°24'16"	73.815	137.195

HYDROLOGIC SUMMARY

DRAINAGE AREA: 72.52 SQUARE KILOMETERS

	DESIGN FLOOD	BASE FLOOD	OVERTOPPING FLOOD
FREQUENCY (YEARS)	50	100	>500
DISCHARGE (CUBIC METERS PER SECOND)	170.0	198.0	>198.0
WATER SURFACE ELEV. AT BRIDGE (METERS)	3.9	4.8	5.2

FLOOD PLAIN DATA ARE BASED UPON INFORMATION AVAILABLE WHEN THE PLANS WERE PREPARED AND ARE SHOWN TO MEET FEDERAL REQUIREMENTS. THE ACCURACY OF SAID INFORMATION IS NOT WARRANTED BY THE STATE AND INTERESTED OR AFFECTED PARTIES SHOULD MAKE THEIR OWN INVESTIGATIONS.

ALL DIMENSIONS ARE IN METERS UNLESS OTHERWISE SHOWN

PRELIMINARY INVESTIGATION SECTION

SCALE 1:100	VERT. DATUM NAVD 88	PHOTOGRAMMETRY AS OF:	DRAWN	BY M. ZUBEIDI 9/97	DESIGN BY Heather Goronea CHECKED Javid Sharifi
	HORZ. DATUM NAD 83	SURVEYED BY P. CRITES 7/97	TRACED	BY M. ZUBEIDI 9/97	DETAILS BY Ton Doan CHECKED Javid Sharifi
ALIGNMENT TIES DISTRICT		FIELD CHECKED BY	CHECKED	BY J. RING 9/97	QUANTITIES BY Javid Sharifi CHECKED Fayek Tannous

STRUCTURES FOUNDATION PLAN SHEET (METRIC) (REV. 6/9/97)

ORIGINAL SCALE IN MILLIMETERS FOR REDUCED PLANS 0 10 20 30 40 50 60 70 80 90 100

STATE OF CALIFORNIA DEPARTMENT OF TRANSPORTATION

DIVISION OF STRUCTURES STRUCTURE DESIGN 12

CU 04
EA 285521

FILE => acfnd.dgn

BRIDGE NO. 37-0582
KILOMETER POST 16.7

PENITENCIA CREEK BRIDGE (REPLACE)

FOUNDATION PLAN

DISREGARD PRINTS BEARING EARLIER REVISION DATES

REVISION DATES (PRELIMINARY STAGE ONLY) 5-26-98 5-21-98 5-1-99 02-10-00 02-22-00 05-06-00

SHEET 3 OF 19

USERNAME => ttcibw DATE PLOTTED => 21-MAR-2001 TIME PLOTTED => 10:37

DIST.	COUNTY	ROUTE	KILOMETER POST TOTAL PROJECT	SHEET NO.	TOTAL SHEETS
04	SCl, Ala	880	15.3/16.9, R0.0/R0.7	421	495

Caltrans Metric

REGISTERED ENGINEER - CIVIL

3-5-01

PLANS APPROVAL DATE

PROFESSIONAL ENGINEER — Lugy Yang — No. 049908 — Exp. 09-30-04 — CIVIL — STATE OF CALIFORNIA

The State of California or its officers or agents shall not be responsible for the accuracy or completeness of electronic copies of this plan sheet.

Caltrans now has a web site! To get to the web site, go to: http://www.dot.ca.gov

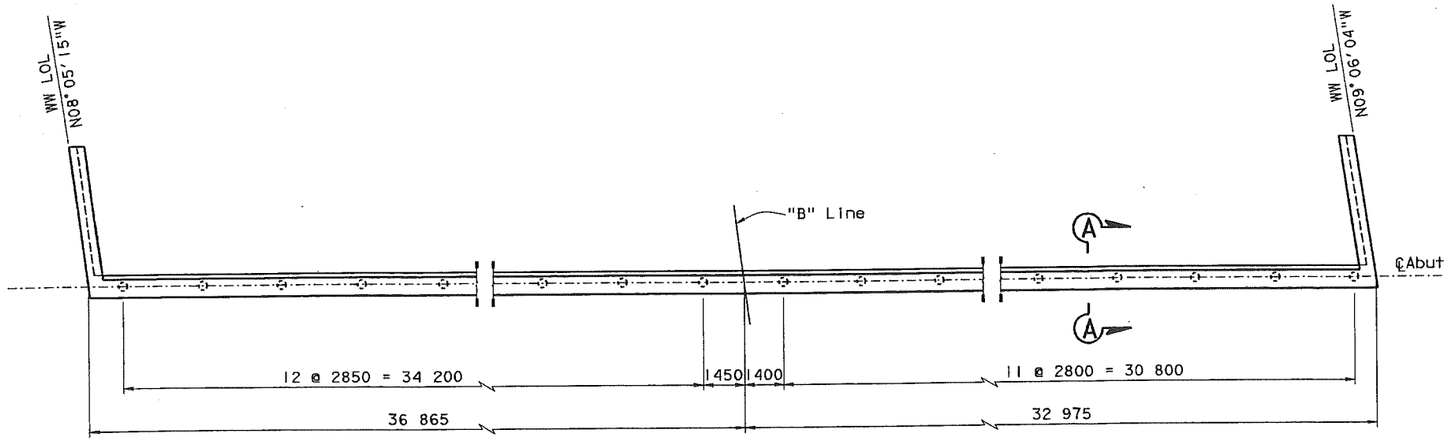

PARTIAL ABUTMENT 1 PLAN

1:100

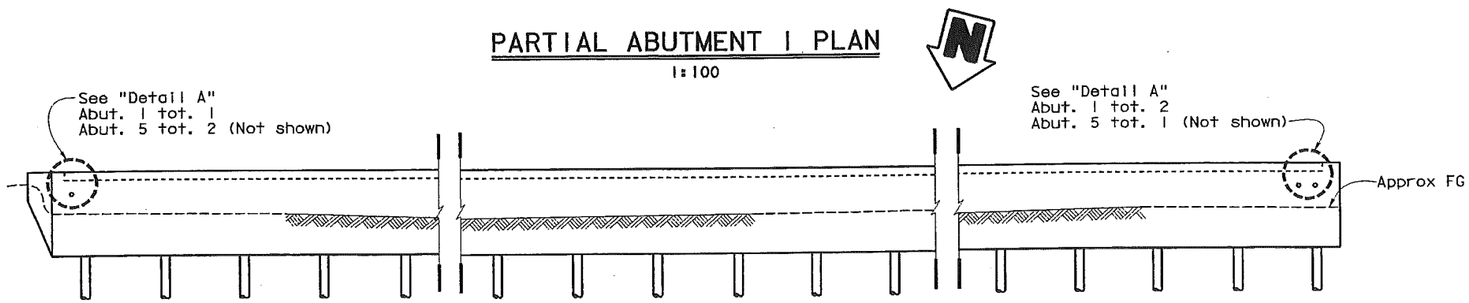

PARTIAL ABUTMENT 1 ELEVATION

1:200

(Abutment 5 elevation similar)

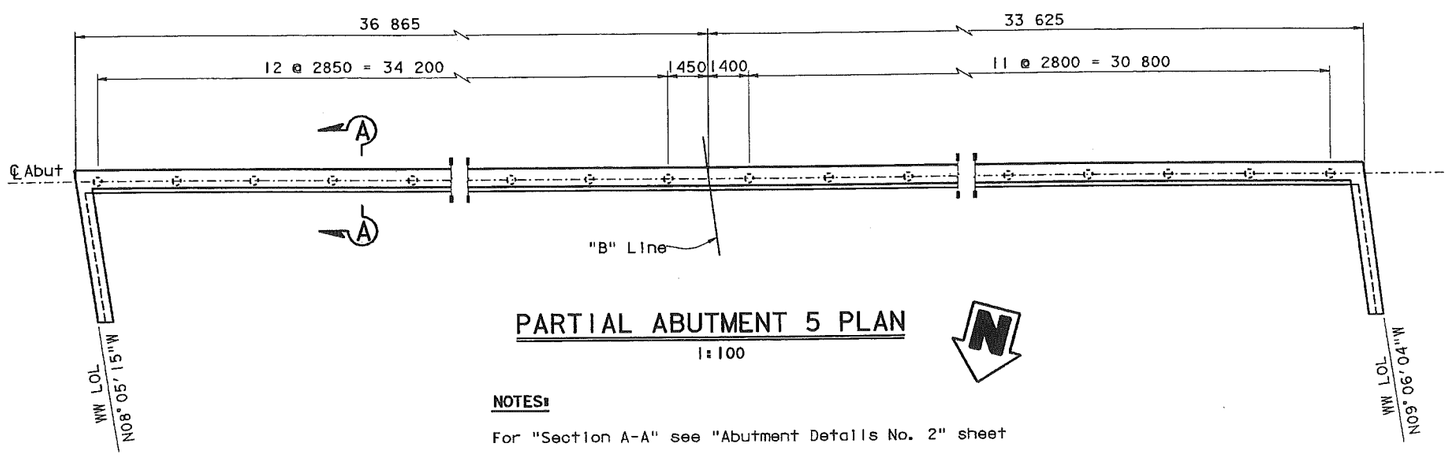

PARTIAL ABUTMENT 5 PLAN

1:100

NOTES:

For "Section A-A" see "Abutment Details No. 2" sheet

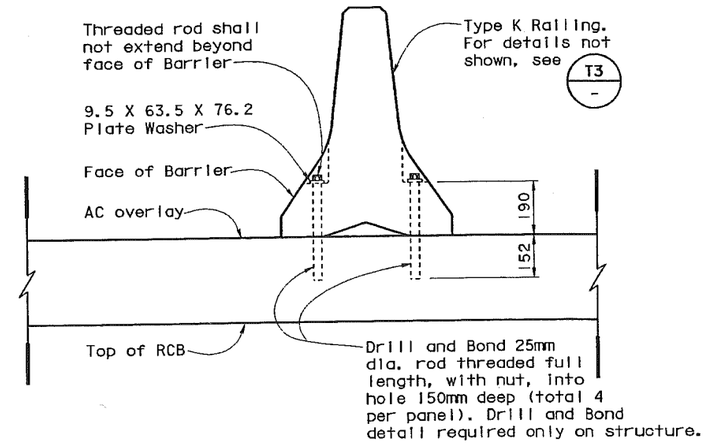

K RAIL ATTACHMENT DETAIL

1:10

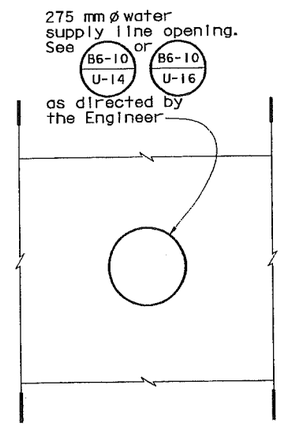

DETAIL A

1:10

ALL DIMENSIONS ARE IN MILLIMETERS UNLESS OTHERWISE SHOWN

DESIGN	BY Heather Goronea	CHECKED Javid Sharifi
DETAILS	BY Ton Doan	CHECKED Javid Sharifi
QUANTITIES	BY Javid Sharifi	CHECKED Fayek Tannous

STATE OF CALIFORNIA
DEPARTMENT OF TRANSPORTATION

DIVISION OF STRUCTURES
STRUCTURE DESIGN 12

CU 04
EA 285521

BRIDGE NO. 37-0582
KILOMETER POST 16.7

PENITENCIA CREEK BRIDGE (REPLACE)

ABUTMENT DETAILS NO. 1

DISREGARD PRINTS BEARING EARLIER REVISION DATES

REVISION DATES (PRELIMINARY STAGE ONLY): 12-28-99 02-18-00 02-22-00 05-16-00 09-01-00

SHEET 4 OF 19

STRUCTURES DESIGN DETAIL SHEET (METRIC) (REV. 7/29/97)

ORIGINAL SCALE IN MILLIMETERS FOR REDUCED PLANS 0 10 20 30 40 50 60 70 80 90 100

FILE => adabt01.dgn

USERNAME => trc16w DATE PLOTTED => 21-MAR-2001 TIME PLOTTED => 10:37

Caltrans now has a web site! To get to the web site, go to: http://www.dot.ca.gov

Caltrans Metric

DIST.	COUNTY	ROUTE	KILOMETER POST TOTAL PROJECT	SHEET NO.	TOTAL SHEETS
04	SCl, Ala	880	15.3/16.9, R0.0/R0.7	422	495

Luqy Yang
REGISTERED ENGINEER - CIVIL
3-5-01
PLANS APPROVAL DATE
REGISTERED PROFESSIONAL ENGINEER Luqy Yang No. 049908 Exp. 09-30-04 CIVIL STATE OF CALIFORNIA

The State of California or its officers or agents shall not be responsible for the accuracy or completeness of electronic copies of this plan sheet.

PILE DATA TABLE - CISS CONCRETE PILES

LOCATION	PILE TYPE	DESIGN LOADING	NOMINAL RESISTANCE		DESIGN PILE TIP ELEVATIONS M			SPECIFIED TIP ELEVATIONS
			COMPRESSION	TENSION	COMPRESSION	TENSION	LATERAL	
Abut 1	Class 625C Alt "X"	625 KN	1250 KN	0	-20.5	-	-20.5	-20.5 m
Bent 2	CISS 610 Open-End	625 KN	1250 KN	625 KN	-19	-13.4	-19	-19 m
Bent 3	CISS 610 Open-End	625 KN	1250 KN	625 KN	-19	-13.4	-19	-19 m
Bent 4	CISS 610 Open-End	625 KN	1250 KN	625 KN	-19	-13.4	-19	-19 m
Abut 5	Class 625C Alt "X"	625 KN	1250 KN	0	-20.5	-	-20.5	-20.5 m

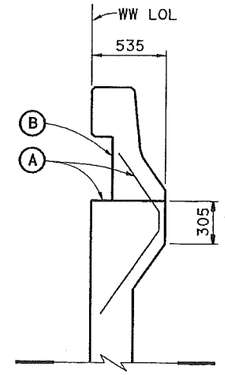

EPOXY COATED REBAR DETAIL
1:20

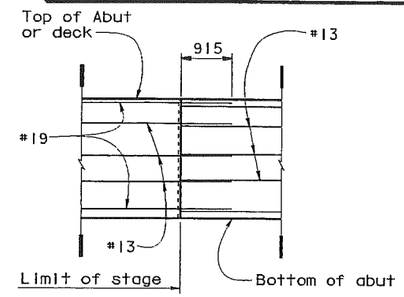

ABUTMENT CONSTRUCTION JOINT REINFORCEMENT
1:50

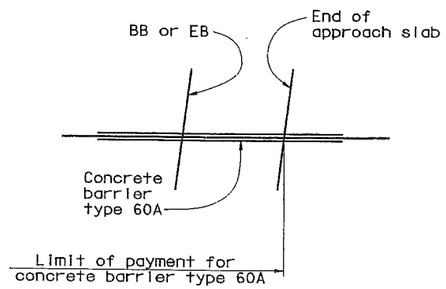

CONCRETE BARRIER TYPE 60A
NO SCALE

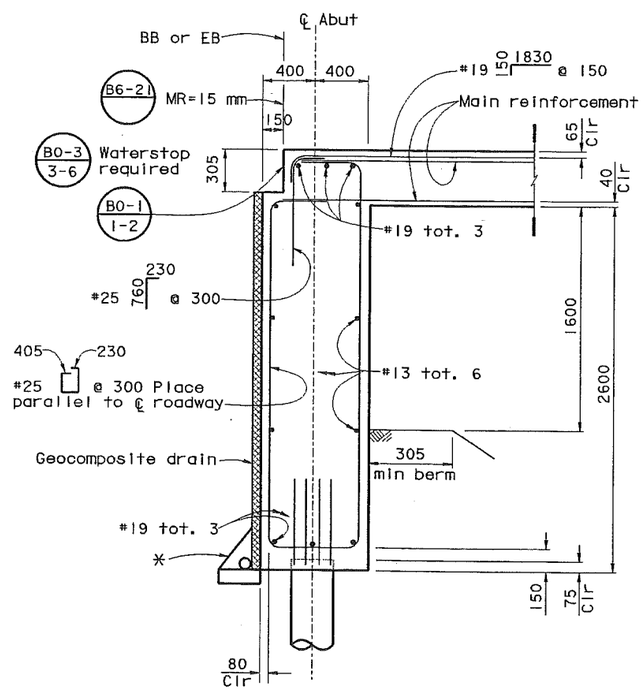

* See "Structure Approach Drainage Details" sheet

SECTION A-A
1:20

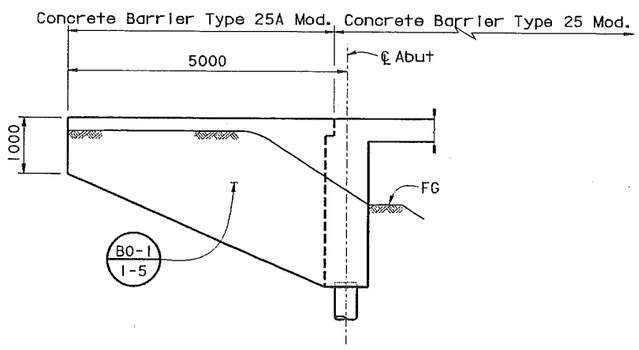

WINGWALL ELEVATION
1:40

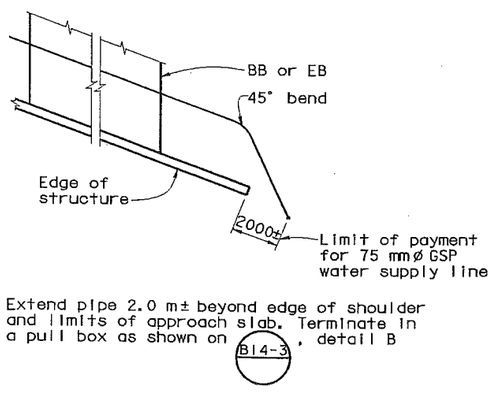

Extend pipe 2.0 m± beyond edge of shoulder and limits of approach slab. Terminate in a pull box as shown on B14-3, detail B

TYPICAL LAYOUT-75 MM Ø GSP WATER SUPPLY LINE
NO SCALE

NOTES:

(A) All wingwall rebar shall be epoxy coated

(B) For architectural treatment see "Typical Section And Bent Details No. 2" sheet

ALL DIMENSIONS ARE IN MILLIMETERS UNLESS OTHERWISE SHOWN

	BY	CHECKED
DESIGN	Heather Goronea	Javid Sharifi
DETAILS	Ton Doan	Javid Sharifi
QUANTITIES	Javid Sharifi	Fayek Tannous

STATE OF CALIFORNIA DEPARTMENT OF TRANSPORTATION

DIVISION OF STRUCTURES STRUCTURE DESIGN 12

BRIDGE NO. 37-0582
KILOMETER POST 16.7

PENITENCIA CREEK BRIDGE (REPLACE)
ABUTMENT DETAILS NO. 2

STRUCTURES DESIGN DETAIL SHEET (METRIC) (REV. 7/29/97)

ORIGINAL SCALE IN MILLIMETERS FOR REDUCED PLANS 0 10 20 30 40 50 60 70 80 90 100

CU 04
EA 285521

DISREGARD PRINTS BEARING EARLIER REVISION DATES

REVISION DATES (PRELIMINARY STAGE ONLY) 12-28-99 02-18-00 02-22-00 05-08-00 09-01-00

SHEET 5 OF 19

FILE => adabt02.dgn

USERNAME => GATE PLOTTED => 21-MAR-2001 TIME PLOTTED => 10:37

DIST.	COUNTY	ROUTE	KILOMETER POST TOTAL PROJECT	SHEET NO.	TOTAL SHEETS
04	SCl, Ala	880	15.3/16.9, R0.0/R0.7	423	495

Caltrans Metric

Luay Yang
REGISTERED ENGINEER - CIVIL

3-5-01
PLANS APPROVAL DATE

REGISTERED PROFESSIONAL ENGINEER — Luay Yang — No. 049908 — Exp. 09-30-04 — CIVIL — STATE OF CALIFORNIA

The State of California or its officers or agents shall not be responsible for the accuracy or completeness of electronic copies of this plan sheet.

Caltrans now has a web site! To get to the web site, go to: http://www.dot.ca.gov

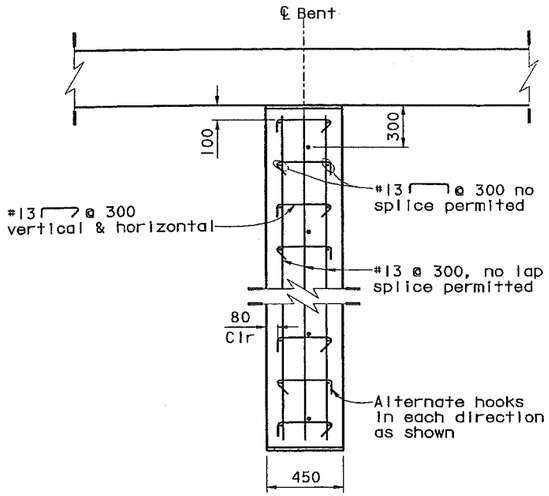

SECTION B-B
1:20

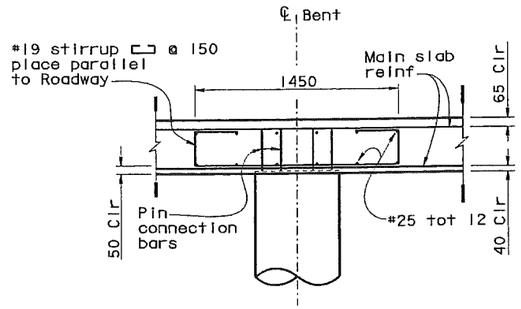

BENT CAP DETAIL
1:20

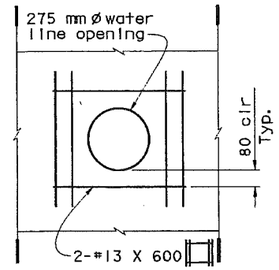

DETAIL D
1:10

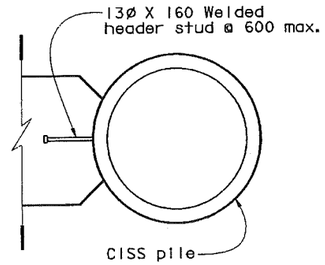

DETAIL C
1:10

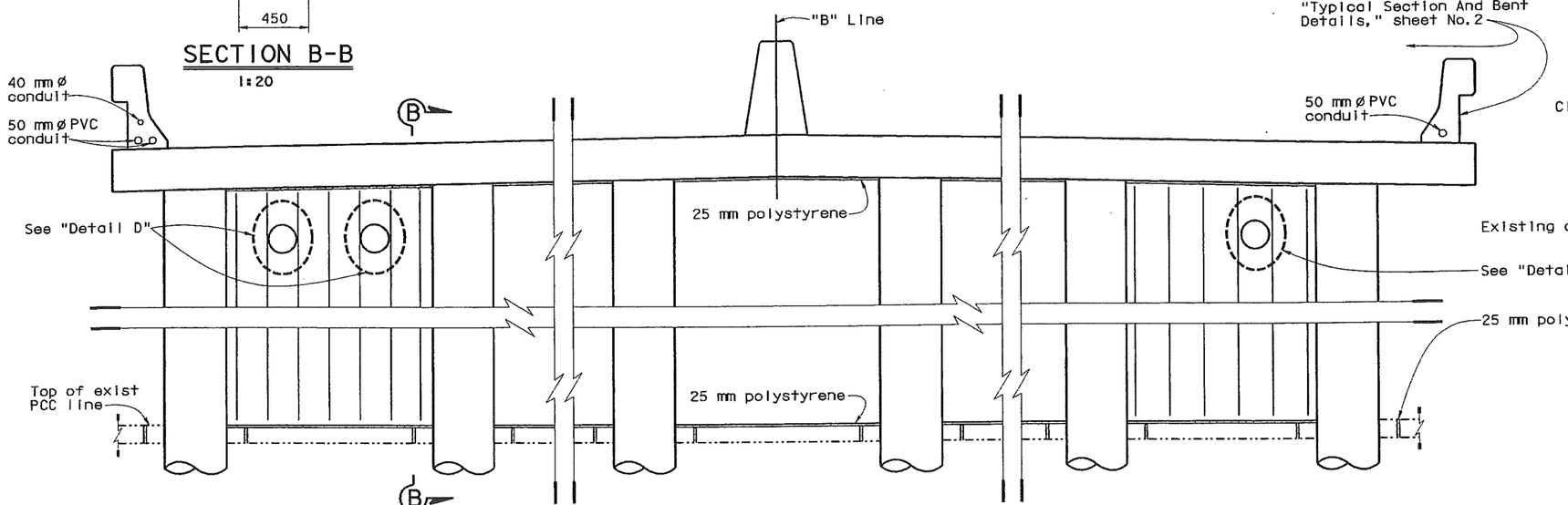

PARTIAL BENT ELEVATION
1:25

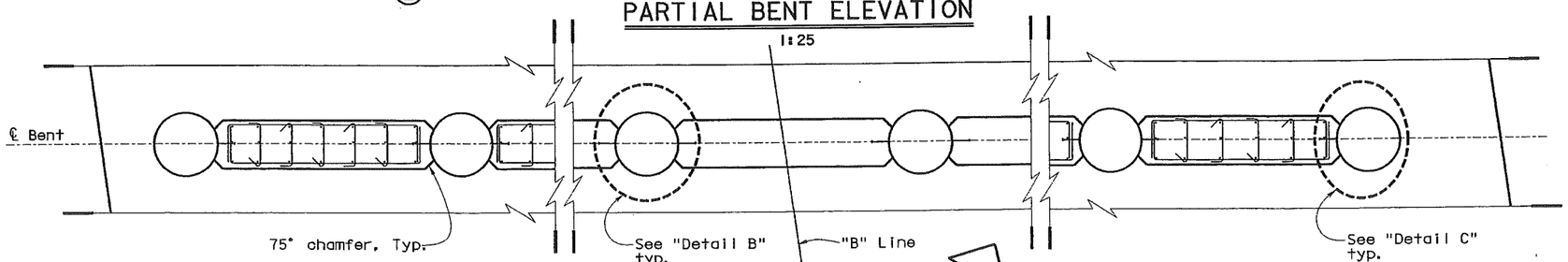

PARTIAL BENT PLAN
1:25

Architectural treatment, see "Typical Section And Bent Details," sheet No. 2

50 mm ø PVC conduit

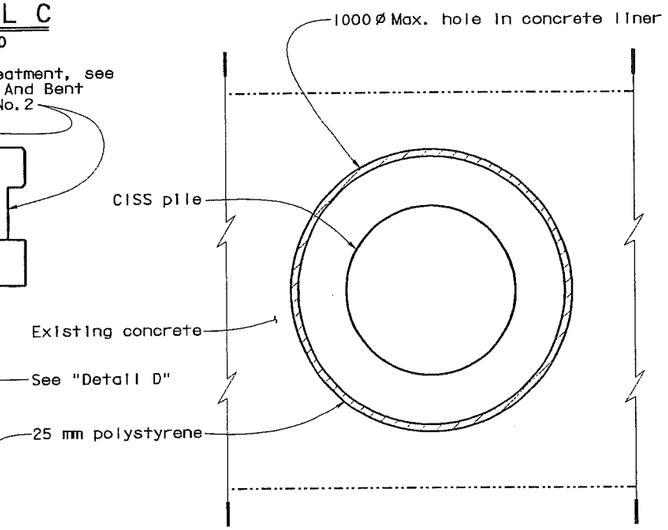

NOTE:

Fill in depression in concrete liner with concrete. Smooth top of concrete to be flush with top of existing concrete liner

DETAIL B
1:10

ALL DIMENSIONS ARE IN MILLIMETERS UNLESS OTHERWISE SHOWN

	BY	CHECKED
DESIGN	Heather Goronea	Javid Sharifi
DETAILS	Ton Doan	Javid Sharifi
QUANTITIES	Javid Sharifi	Fayek Tannous

STATE OF CALIFORNIA
DEPARTMENT OF TRANSPORTATION

DIVISION OF STRUCTURES
STRUCTURE DESIGN 12

BRIDGE NO. 37-0582
KILOMETER POST 16.7

PENITENCIA CREEK BRIDGE (REPLACE)
TYPICAL SECTION AND BENT DETAILS NO. 1

CU 04
EA 285521

DISREGARD PRINTS BEARING EARLIER REVISION DATES

REVISION DATES (PRELIMINARY STAGE ONLY): 5-28-98 01-14-99 01-26-00 02-28-00 02-29-00 05-18-00 09-07-00

SHEET 6 OF 19

STRUCTURES DESIGN DETAIL SHEET (METRIC) (REV. 7/29/97)

ORIGINAL SCALE IN MILLIMETERS FOR REDUCED PLANS 0 10 20 30 40 50 60 70 80 90 100

FILE => aftyp01.dgn

USERNAME => trcl6w DATE PLOTTED => 21-MAR-2001 TIME PLOTTED => 10:37

DIST.	COUNTY	ROUTE	KILOMETER POST TOTAL PROJECT	SHEET NO.	TOTAL SHEETS
04	SCl, Ala	880	15.3/16.9, R0.0/R0.7	424	495

REGISTERED ENGINEER - CIVIL

3-5-01

PLANS APPROVAL DATE

REGISTERED PROFESSIONAL ENGINEER Lugi Yang No. 049908 Exp. 09-30-04 CIVIL STATE OF CALIFORNIA

The State of California or its officers or agents shall not be responsible for the accuracy or completeness of electronic copies of this plan sheet.

Caltrans now has a web site! To get to the web site, go to: http://www.dot.ca.gov

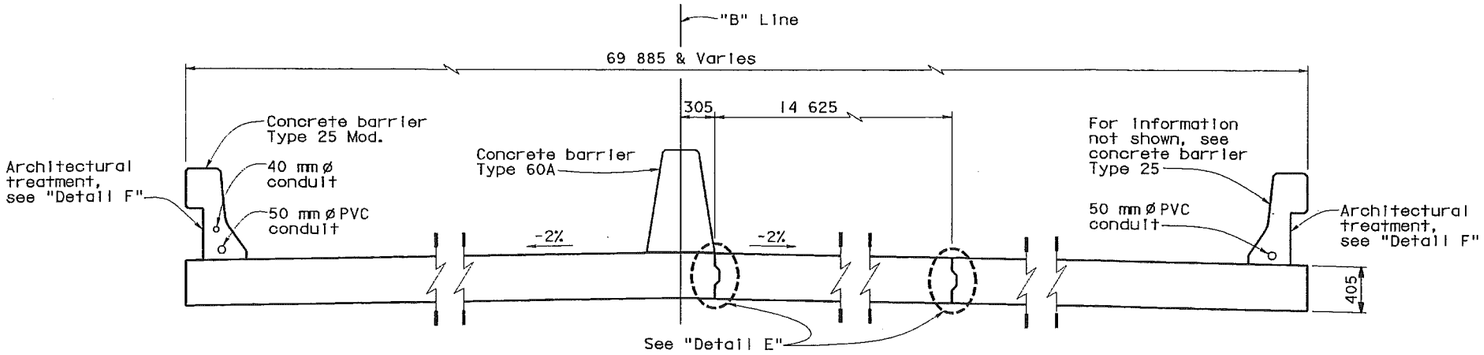

TYPICAL SECTION
1:25

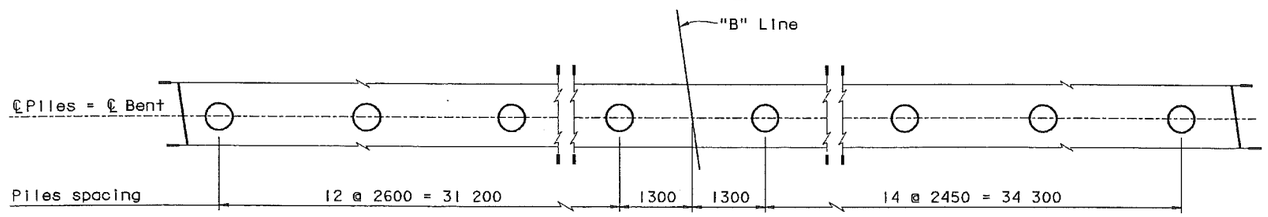

PILE LAYOUT
1:50

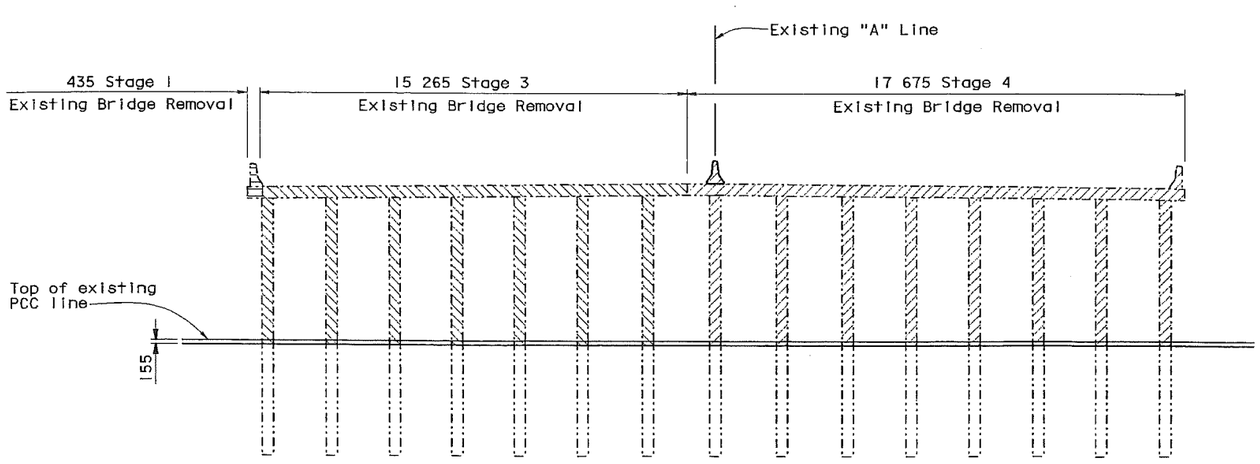

EXISTING BRIDGE REMOVAL
1:100

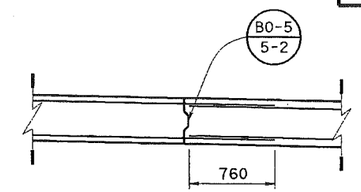

NOTE:

760 mm lap splice for #13 & #16 transverse bars in the deck & no lap splice allowed for #25 bars at bents. Splice #25 bars at bents by butt welding or mechanical devices

DETAIL E
1:25

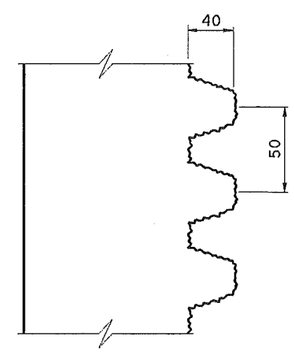

TYPICAL AESTHETIC TREATMENT (FRACTURED RIB)
NO SCALE

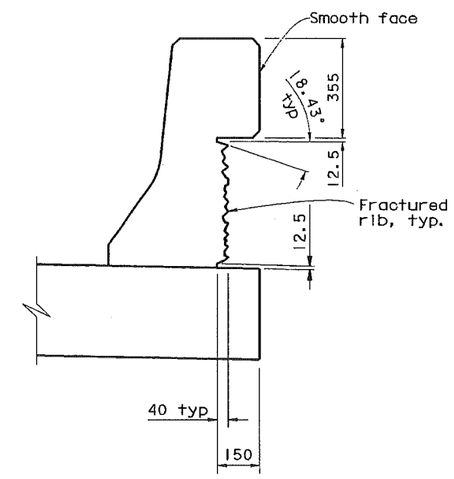

DETAIL F
1:50

NOTE:

Remove existing columns/piles just below the bottom of existing concrete liner. Fill in depression in concrete liner with concrete. Smooth top of concrete to be flush with top of existing concrete liner

Indicates Existing Bridge Stage 1 Removal

Indicates Existing Bridge Stage 3 Removal

Indicates Existing Bridge Stage 4 Removal

ALL DIMENSIONS ARE IN MILLIMETERS UNLESS OTHERWISE SHOWN

	BY	CHECKED
DESIGN	Heather Goronea	Javid Sharifi
DETAILS	Ton Doan	Javid Sharifi
QUANTITIES	Javid Sharifi	Fayek Tannous

STATE OF CALIFORNIA DEPARTMENT OF TRANSPORTATION

DIVISION OF STRUCTURES STRUCTURE DESIGN 12

BRIDGE NO. 37-0582

KILOMETER POST 16.7

PENITENCIA CREEK BRIDGE (REPLACE)

TYPICAL SECTION AND BENT DETAILS NO. 2

STRUCTURES DESIGN DETAIL SHEET (METRIC) (REV. 7/29/97)

ORIGINAL SCALE IN MILLIMETERS FOR REDUCED PLANS 0 10 20 30 40 50 60 70 80 90 100

CU 04
EA 285521

DISREGARD PRINTS BEARING EARLIER REVISION DATES

REVISION DATES (PRELIMINARY STAGE ONLY) 5-28-98 01-14-99 01-28-00 02-18-00 05-16-00 01-26-01

SHEET 7 OF 19

FILE => aftyp02.dgn

USERNAME = DATE PLOTTED => 21-MAR-2001 TIME PLOTTED => 10:37

DIST	COUNTY	ROUTE	KILOMETER POST TOTAL PROJECT	SHEET No	TOTAL SHEETS
04	SCl, Ala	880	15.3/16.9, R0.0/R0.7	426	495

Lucy Yang
REGISTERED CIVIL ENGINEER

3-5-01
PLANS APPROVAL DATE

REGISTERED PROFESSIONAL ENGINEER
Lucy Yang
No. 049908
Exp. 09-30-04
CIVIL
STATE OF CALIFORNIA

The State of California or its officers or agents shall not be responsible for the accuracy or completeness of electronic copies of this plan sheet.

Caltrans now has a web site! To get to the web site, go to: http://www.dot.ca.gov

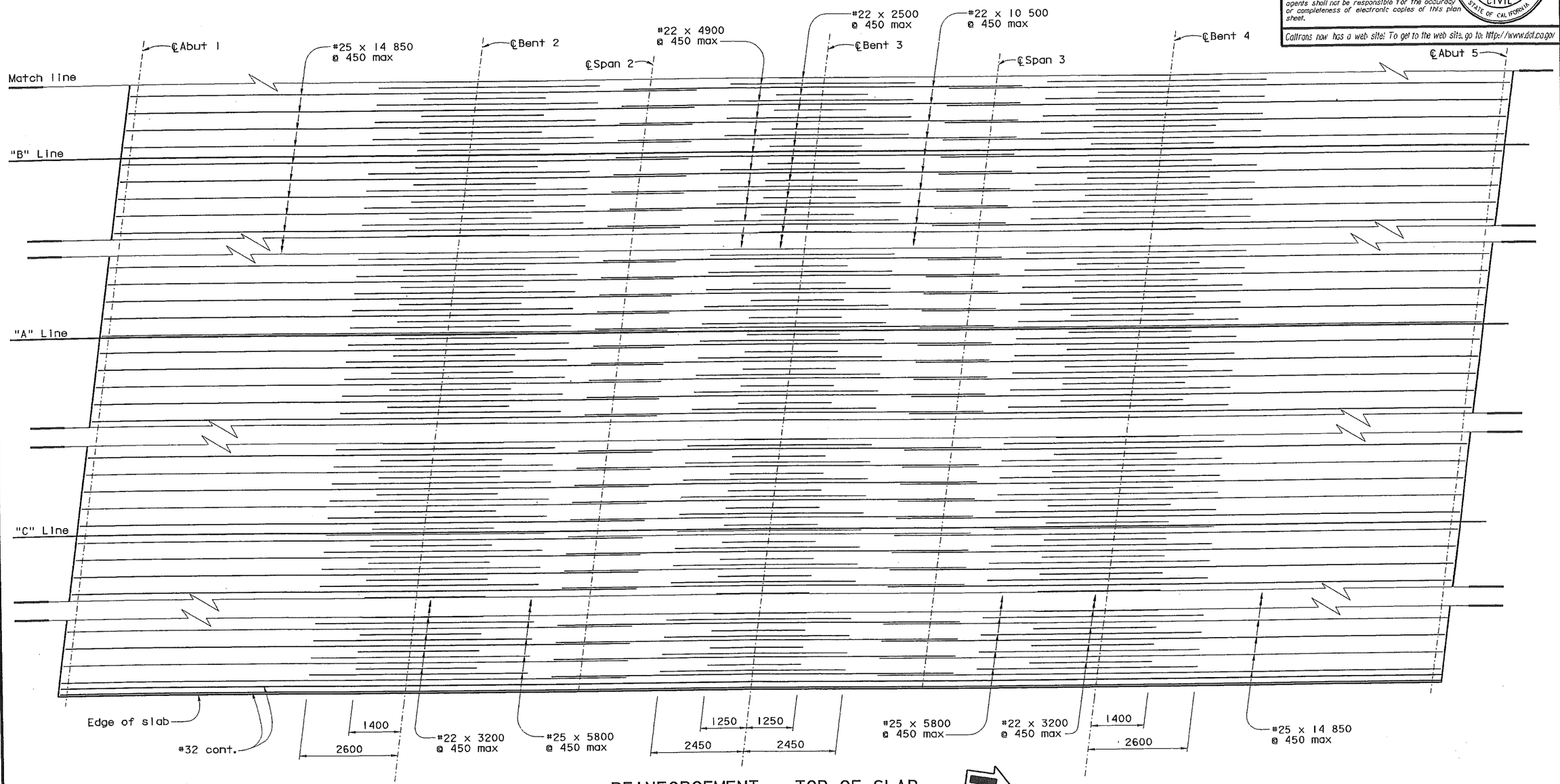

REINFORCEMENT - TOP OF SLAB

1:50

ALL DIMENSIONS ARE IN MILLIMETERS UNLESS OTHERWISE SHOWN

	BY	CHECKED
DESIGN	Heather Goronea	David Sharifi
DETAILS	Ton Doan	David Sharifi
QUANTITIES	David Sharifi	Fayek Tannous

STATE OF CALIFORNIA
DEPARTMENT OF TRANSPORTATION

DIVISION OF STRUCTURES
STRUCTURE DESIGN 12

CU 04
EA 285521

BRIDGE NO. 37-0582
KILOMETER POST 16.7

PENITENCIA CREEK BRIDGE (REPLACE)
TOP SLAB REINFORCEMENT LAYOUT NO. 2

DISREGARD PRINTS BEARING EARLIER REVISION DATES

REVISION DATES (PRELIMINARY STAGE ONLY): 2-8-99, 2-11-99, 02-18-00, 05-16-00

SHEET 9 OF 19

STRUCTURES DESIGN DETAIL SHEET (METRIC) (REV. 9/2/98)

ORIGINAL SCALE IN MILLIMETERS FOR REDUCED PLANS 0 10 20 30 40 50 60 70 80 90 100

FILE => ajgrf02top.dgn

USERNAME => trclaw DATE PLOTTED => 21-MAR-2001 TIME PLOTTED => 10:38

DIST	COUNTY	ROUTE	KILOMETER POST TOTAL PROJECT	SHEET No	TOTAL SHEETS
04	SCl, Ala	880	15.3/16.9, R0.0/R0.7	425	495

Caltrans Metric

REGISTERED CIVIL ENGINEER

3-5-01
PLANS APPROVAL DATE

REGISTERED PROFESSIONAL ENGINEER
Lugy Yang
No. 049908
Exp. 09-30-04
CIVIL
STATE OF CALIFORNIA

The State of California or its officers or agents shall not be responsible for the accuracy or completeness of electronic copies of this plan sheet.

Caltrans now has a web site! To get to the web site, go to: http://www.dot.ca.gov

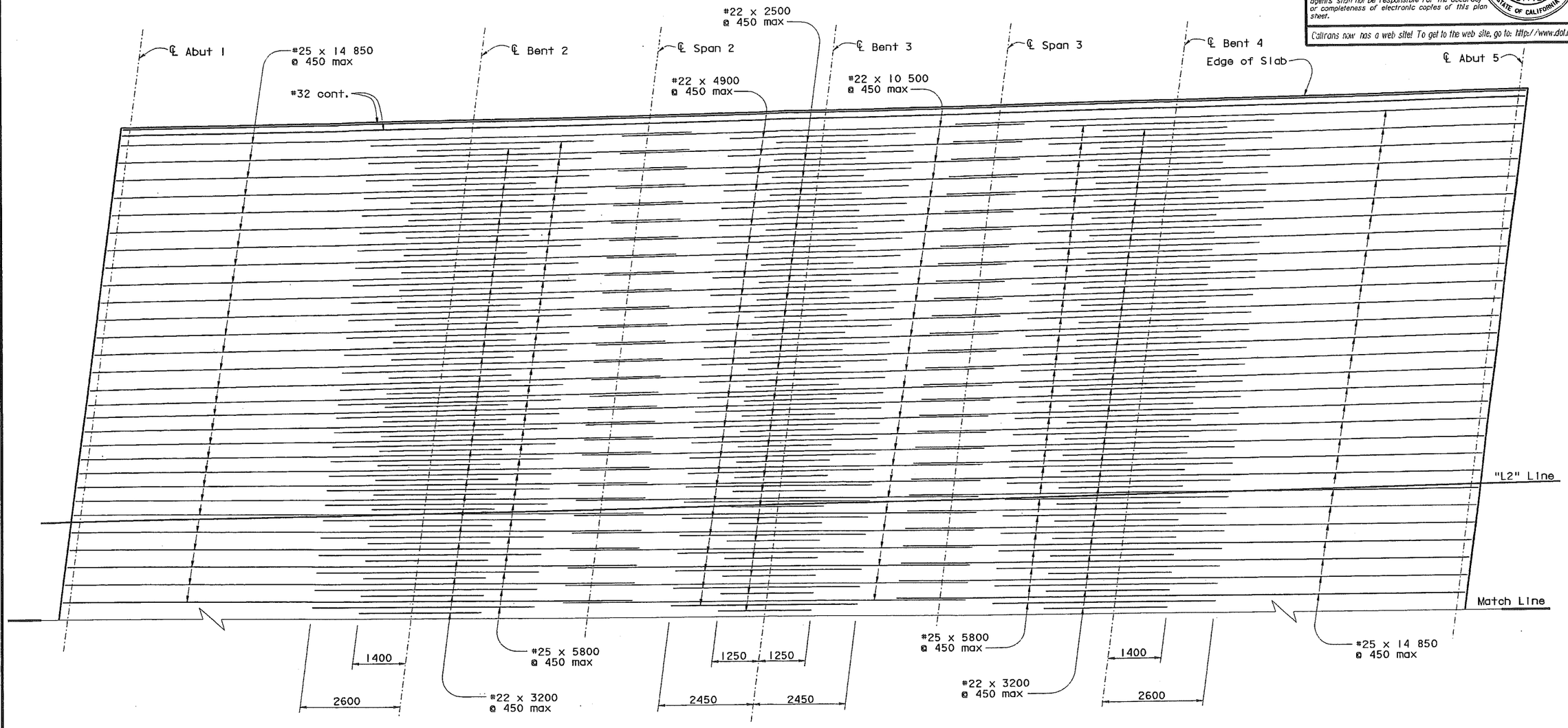

REINFORCEMENT - TOP OF SLAB

1:50

ALL DIMENSIONS ARE IN MILLIMETERS UNLESS OTHERWISE SHOWN

DESIGN	BY Heather Goronea	CHECKED Javid Sharifi	
DETAILS	BY Ton Doan	CHECKED Javid Sharifi	
QUANTITIES	BY Javid Sharifi	CHECKED Fayek Tannous	

STATE OF CALIFORNIA
DEPARTMENT OF TRANSPORTATION

DIVISION OF STRUCTURES
STRUCTURE DESIGN 12

BRIDGE NO. 37-0582
KILOMETER POST 16.7

PENITENCIA CREEK BRIDGE (REPLACE)
TOP SLAB REINFORCEMENT LAYOUT NO. 1

STRUCTURES DESIGN DETAIL SHEET (METRIC) (REV. 3/1/99)

ORIGINAL SCALE IN MILLIMETERS FOR REDUCED PLANS 0 10 20 30 40 50 60 70 80 90 100

CU 04
EA 285521

FILE => ajgrf01top.dgn

DISREGARD PRINTS BEARING EARLIER REVISION DATES

REVISION DATES (PRELIMINARY STAGE ONLY) 06-01-99 02-02-99 02-18-99 04-01-99 02-18-00 02-22-00 05-15-00

SHEET 8 OF 19

USERNAME => trclew DATE PLOTTED => 21-MAR-2001 TIME PLOTTED => 10:37

DIST.	COUNTY	ROUTE	KILOMETER POST TOTAL PROJECT	SHEET NO.	TOTAL SHEETS
04	SCl, Ala	880	15.3/16.9, R0.0/R0.7	427	495

Caltrans Metric

Lugy Yang
REGISTERED ENGINEER - CIVIL

3-5-01
PLANS APPROVAL DATE

REGISTERED PROFESSIONAL ENGINEER
Lugy Yang
No. 049908
Exp. 09-30-04
CIVIL
STATE OF CALIFORNIA

The State of California or its officers or agents shall not be responsible for the accuracy or completeness of electronic copies of this plan sheet.

Caltrans now has a web site! To get to the web site, go to: http://www.dot.ca.gov

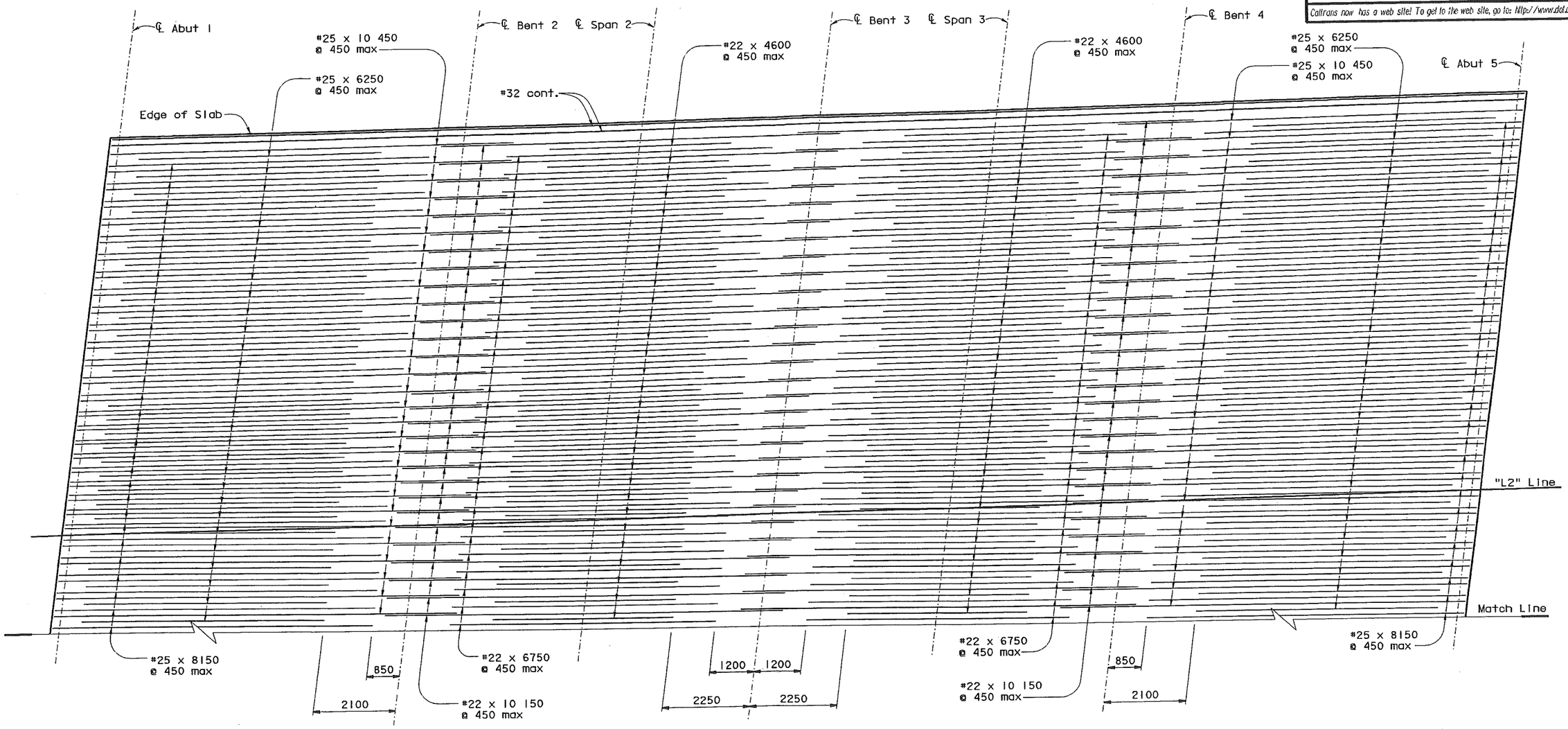

REINFORCEMENT - BOTTOM OF SLAB

1:50

ALL DIMENSIONS ARE IN MILLIMETERS UNLESS OTHERWISE SHOWN

	BY	CHECKED
DESIGN	Heather Goronea	Javid Sharifi
DETAILS	Ton Doan	Javid Sharifi
QUANTITIES	Javid Sharifi	Fayek Tannous

STATE OF CALIFORNIA
DEPARTMENT OF TRANSPORTATION

DIVISION OF STRUCTURES
STRUCTURE DESIGN 12

BRIDGE NO. 37-0582
KILOMETER POST 16.7

PENITENCIA CREEK BRIDGE (REPLACE)
BOTTOM SLAB REINFORCEMENT LAYOUT NO. 1

CU 04
EA 285521

DISREGARD PRINTS BEARING EARLIER REVISION DATES

REVISION DATES (PRELIMINARY STAGE ONLY): 2-9-99, 2-18-99, 4-1-99, 02-18-00, 02-22-00, 05-16-00

SHEET 10 OF 19

STRUCTURES DESIGN DETAIL SHEET (METRIC) (REV. 7/29/97)

ORIGINAL SCALE IN MILLIMETERS FOR REDUCED PLANS 0 10 20 30 40 50 60 70 80 90 100

FILE => ajgrf03bot.dgn

USERNAME => trclew DATE PLOTTED => 21-MAR-2001 TIME PLOTTED => 10:38

DIST	COUNTY	ROUTE	KILOMETER POST TOTAL PROJECT	SHEET No	TOTAL SHEETS
04	SCl, Ala	880	15.3/16.9, R0.0/R0.7	428	495

Lucy Yang
REGISTERED CIVIL ENGINEER

3-5-01
PLANS APPROVAL DATE

REGISTERED PROFESSIONAL ENGINEER
Lucy Yang
No. 049908
Exp. 09-30-04
CIVIL
STATE OF CALIFORNIA

The State of California or its officers or agents shall not be responsible for the accuracy or completeness of electronic copies of this plan sheet.

Cal-Trans now has a web site! To get to the web site, go to: http://www.dot.ca.gov

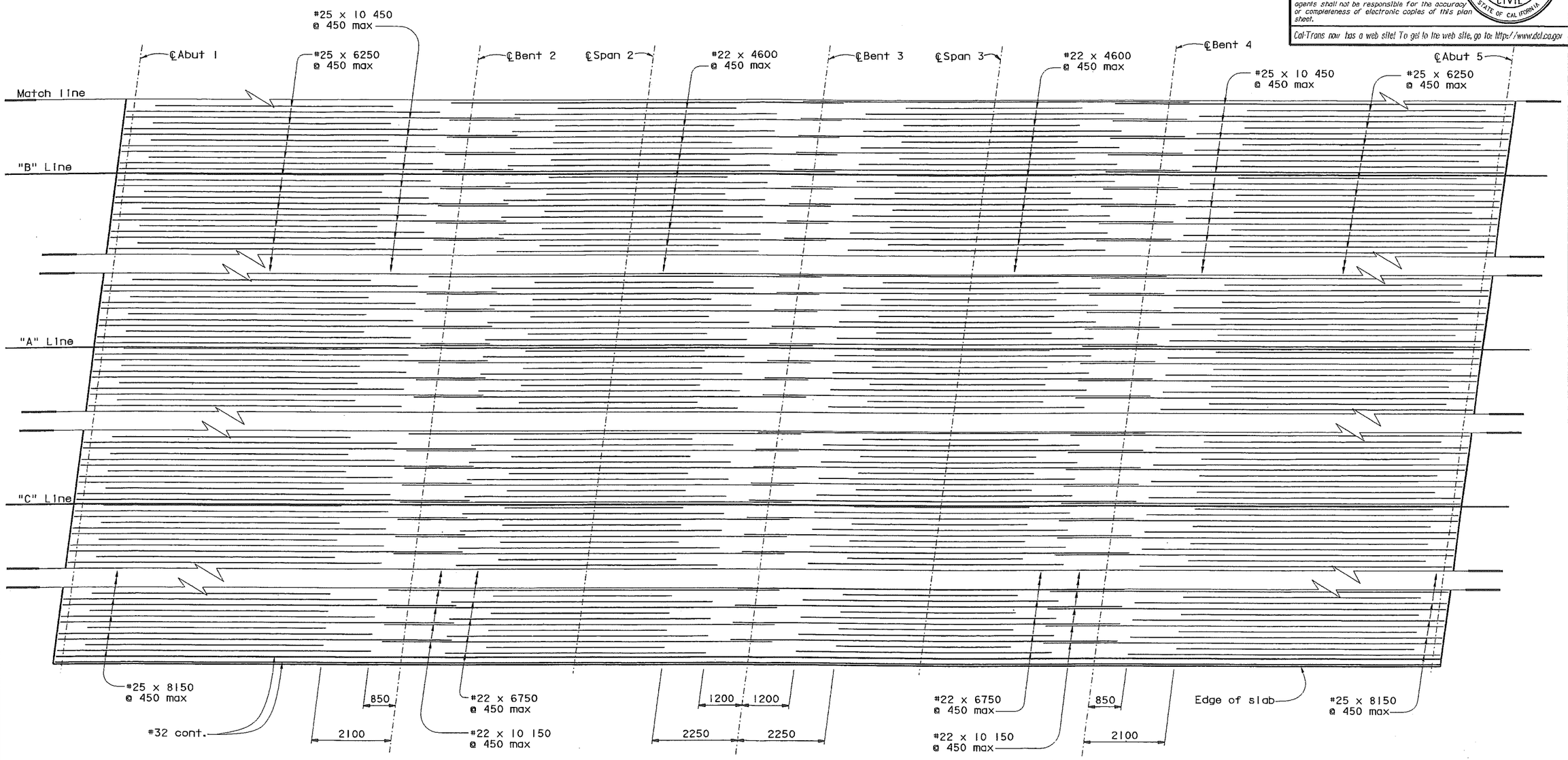

REINFORCEMENT - BOTTOM OF SLAB

1:50

ALL DIMENSIONS ARE IN MILLIMETERS UNLESS OTHERWISE SHOWN

	BY	CHECKED
DESIGN	Heather Goronea	Javid Sharifi
DETAILS	Ton Doan	Javid Sharifi
QUANTITIES	Javid Sharifi	Fayek Tannous

STATE OF CALIFORNIA
DEPARTMENT OF TRANSPORTATION

DIVISION OF STRUCTURES
STRUCTURE DESIGN 12

BRIDGE NO. 37-0582
KILOMETER POST 16.7

PENITENCIA CREEK BRIDGE (REPLACE)
BOTTOM SLAB REINFORCEMENT LAYOUT NO. 2

STRUCTURES DESIGN DETAIL SHEET (METRIC) (REV. 9/2/98)

ORIGINAL SCALE IN MILLIMETERS FOR REDUCED PLANS 0 10 20 30 40 50 60 70 80 90 100

CU 04
EA 285521

FILE => ajgrf04bot.dgn

DISREGARD PRINTS BEARING EARLIER REVISION DATES

REVISION DATES (PRELIMINARY) STAGE ONLY)
2-18-99 2-16-99 02-18-00 02-28-00 05-16-00

SHEET 11 OF 19

USERNAME => trolew DATE PLOTTED => 21-MAR-2001 TIME PLOTTED => 10:38

DIST	COUNTY	ROUTE	KILOMETER POST TOTAL PROJECT	SHEET No	TOTAL SHEETS
04	SCl, Ala	880	15.3/16.9, R0.0/R0.7	429	495

Caltrans Metric

REGISTERED CIVIL ENGINEER

3-5-01
PLANS APPROVAL DATE

REGISTERED PROFESSIONAL ENGINEER Lucy Yang No. 049908 Exp. 09-30-04 CIVIL STATE OF CALIFORNIA

The State of California or its officers or agents shall not be responsible for the accuracy or completeness of electronic copies of this plan sheet.

Cal-Trans now has a web site! To get to the web site, go to: http://www.dot.ca.gov

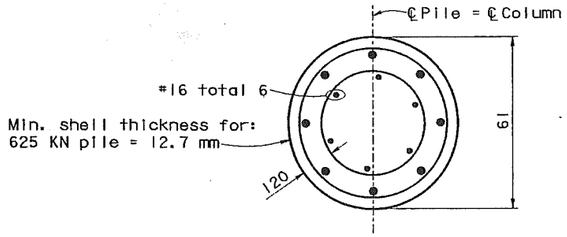

SECTION A-A
1:10

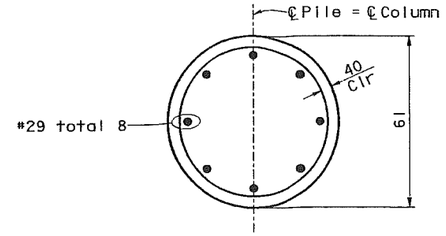

SECTION B-B
1:10

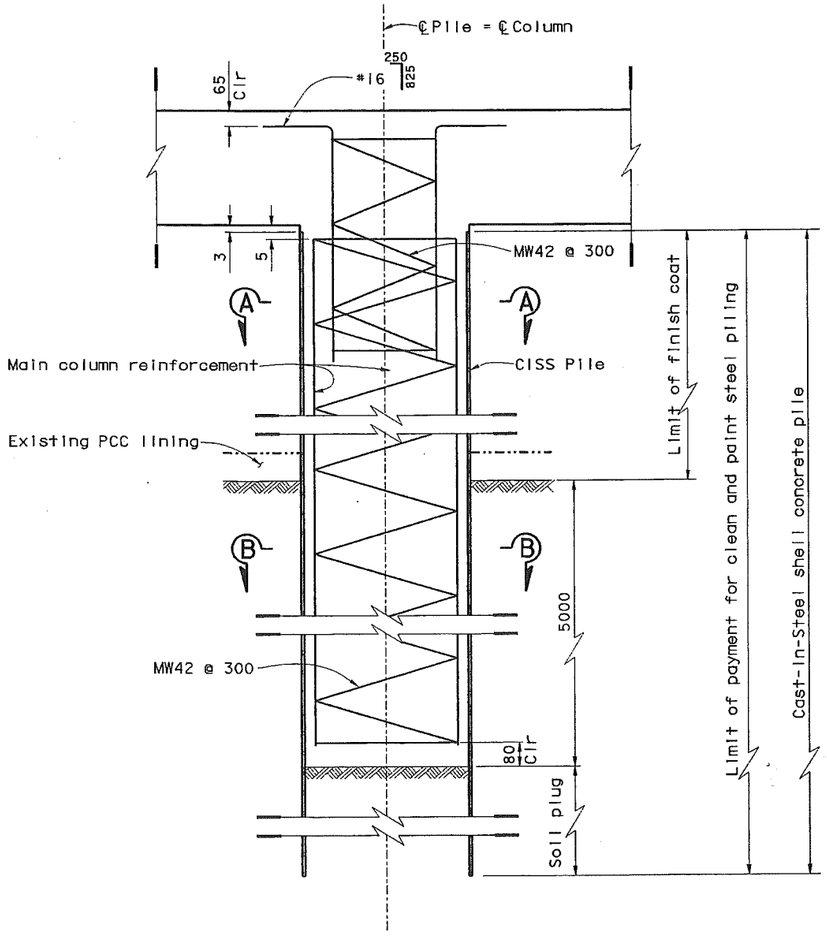

CAST-IN-STEEL SHELL CONCRETE PILE
1:10

NOTES:

1. Design service level loading is 625 kN or less as noted.
2. Maximum size of aggregate is 25 mm.
3. No splices allowed in the longitudinal reinforcement.

ALL DIMENSIONS ARE IN MILLIMETERS UNLESS OTHERWISE SHOWN

DESIGN	BY Heather Goronea	CHECKED Javid Sharifi	
DETAILS	BY Ton Doan	CHECKED Javid Sharifi	
QUANTITIES	BY Javid Sharifi	CHECKED Fayek Tannous	

STATE OF CALIFORNIA
DEPARTMENT OF TRANSPORTATION

DIVISION OF STRUCTURES
STRUCTURE DESIGN 12

BRIDGE NO. 37-0582
KILOMETER POST 16.7

PENITENCIA CREEK BRIDGE (REPLACE)

PILE DETAILS

CU 04
EA 285521

DISREGARD PRINTS BEARING EARLIER REVISION DATES

REVISION DATES (PRELIMINARY STAGE ONLY) 02-15-00 02-22-00 05-16-00

SHEET 12 OF 19

STRUCTURES DESIGN DETAIL SHEET (METRIC) (REV. 9/2/98)

ORIGINAL SCALE IN MILLIMETERS FOR REDUCED PLANS 0 10 20 30 40 50 60 70 80 90 100

FILE => akmsc01.dgn

USERNAME => trclew DATE PLOTTED => 21-MAR-2001 TIME PLOTTED => 10:38

RELEASED 8-26-97

DIST.	COUNTY	ROUTE	KILOMETER POST TOTAL PROJECT	SHEET NO.	TOTAL SHEETS
04	SCl, Ala	880	15.3/16.9 R0.0/R0.7	430	495

Caltrans Metric

REGISTERED ENGINEER - CIVIL

3-5-01
PLANS APPROVAL DATE

REGISTERED PROFESSIONAL ENGINEER — Lugy Yang — No. 049908 — Exp. 09-30-04 — CIVIL — STATE OF CALIFORNIA

The State of California or its officers or agents shall not be responsible for the accuracy or completeness of electronic copies of this plan sheet.

Cal-Trans now has a web site! To get to the web site, go to: http://www.dot.ca.gov

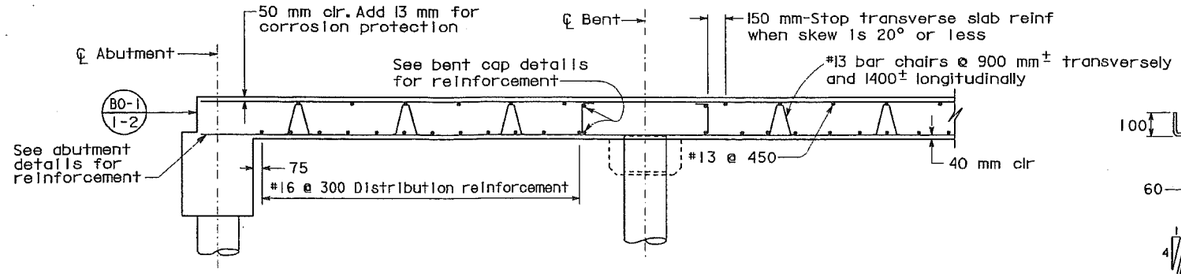

LONGITUDINAL SECTION

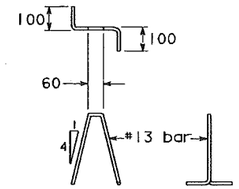

BAR CHAIR DETAIL

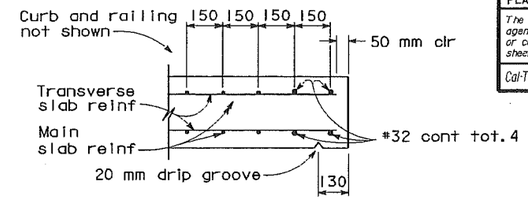

EDGE OF SLAB DETAILS

BAR SPLICE LENGTH								
Bar size	#13	#16	#19	#22	#25	#29	#32	#36
All bars, except top bars in spans over 7 m	580	710	860	990	1140	1730	1930	2160
Top bars in spans over 7 m	580	710	860	1350	1520	1960	2460	3050

REINFORCEMENT NOTES:

Splices in top main bars to be located near center of span.
Splices in bottom main bars to be located near bent.
Spacing of all transverse bars is measured along ℄ roadway.
Skew 0° to 20°: Place all transverse bars parallel to bent.
Skew over 20°: Place transverse slab bars perpendicular to ℄ bridge. See details at right and below.

NOT USED

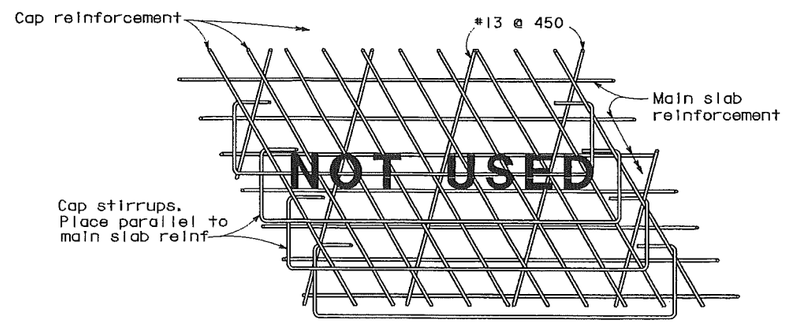

TOP SLAB REINFORCEMENT AT BENT

Note: View for main span over 7 m.
Bar placement similar for spans under 7 m.

GENERAL NOTES
LOAD FACTOR DESIGN

Design: Bridge Design Specifications (1983 AASHTO with interims and revisions by CALTRANS)

NOT USED

Dead load: Includes 1680 Pa for future wearing surface.
Live loading: HS20-44 and alternative and permit design load.
Reinforced concrete: fy = 420 MPa
f'c = 22 Mpa
n = 9

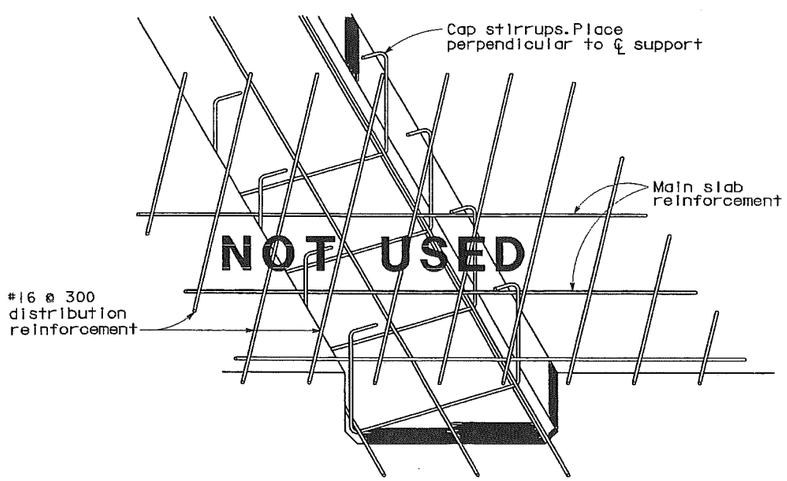

DROPPED CAP

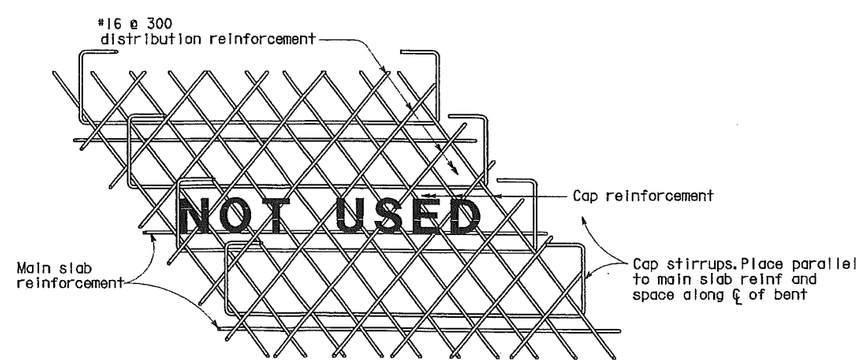

FLUSH CAP

BOTTOM SLAB REINFORCEMENT AT BENT

NO SCALE
ALL DIMENSIONS ARE IN MILLIMETERS UNLESS OTHERWISE SHOWN

STANDARD DRAWING

FILE NO. XS 12-55	DESIGN BY LY. LEE	CHECKED T. FARNAN	APPROVAL RECOMMENDED BY
DRAWING DATE 8/86	DETAILS BY R. YEE	CHECKED T. FARNAN	DESIGN SUPERVISOR
	SUBMITTED BY R.S. WATANABE		

DS OSD 2147A (METRIC) (REV. 2/25/97)

STATE OF CALIFORNIA
DEPARTMENT OF TRANSPORTATION

DIVISION OF STRUCTURES
STRUCTURE DESIGN 12

BRIDGE NO. 37-0582
KILOMETER POST 16.7

PENITENCIA CREEK BRIDGE (REPLACE)
SLAB REINFORCEMENT DETAILS

ORIGINAL SCALE IN MILLIMETERS FOR REDUCED PLANS 0 10 20 30 40 50 60 70 80 90 100

CU 04
EA 285521

DISREGARD PRINTS BEARING EARLIER REVISION DATES

REVISION DATES (PRELIMINARY STAGE ONLY) 5-20-98 02-18-00 02-22-00 05-16-00

SHEET 13 OF 19

USERNAME => trolew
akmsc02.dgn
XS1255.DGN

TIME PLOTTED => 10:38
TIME PLOTTED => 21-MAR-2001

RELEASED 4-23-98

DIST.	COUNTY	ROUTE	KILOMETER POST TOTAL PROJECT	SHEET NO.	TOTAL SHEETS
04	SCl, Ala	880	15.3/16.9, R0.0/R0.7	431	495

Caltrans Metric

REGISTERED ENGINEER - CIVIL

3-5-01
PLANS APPROVAL DATE

REGISTERED PROFESSIONAL ENGINEER — Lucy Yang — No. 049908 — Exp. 09-30-04 — CIVIL — STATE OF CALIFORNIA

The State of California or its officers or agents shall not be responsible for the accuracy or completeness of electronic copies of this plan sheet.

Cal-Trans now has a web site! To get to the web site, go to: http://www.dot.ca.gov

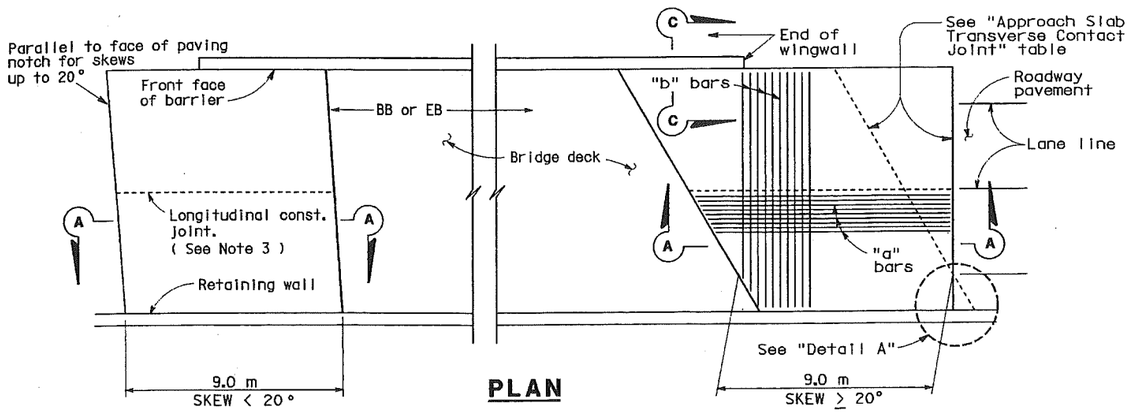

PLAN

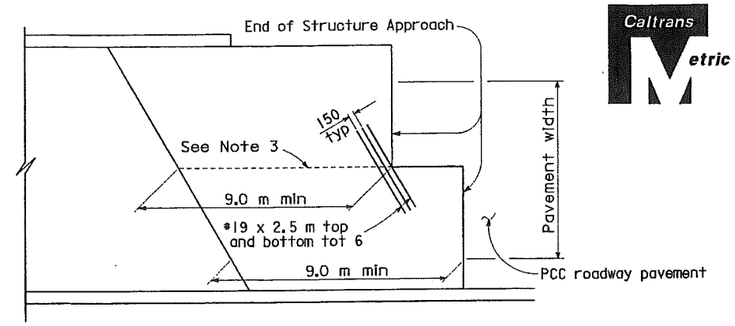

STRUCTURE APPROACH - END STAGGER DETAIL

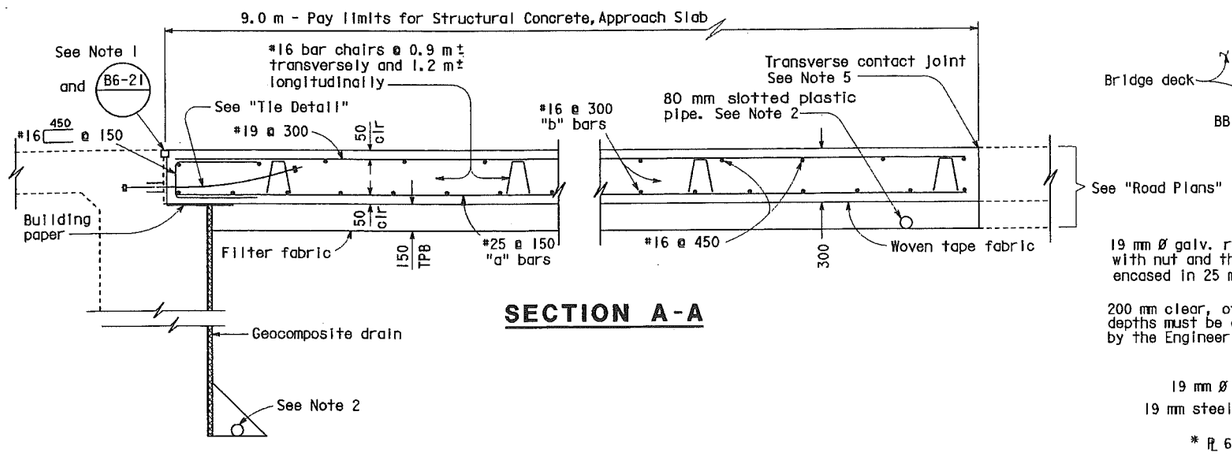

SECTION A-A

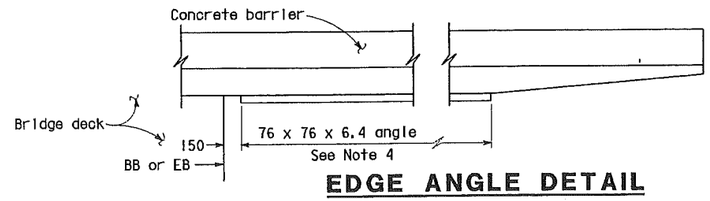

EDGE ANGLE DETAIL

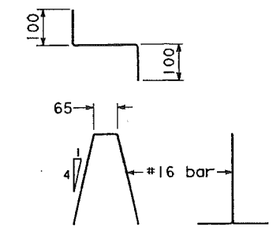

BAR CHAIR DETAIL

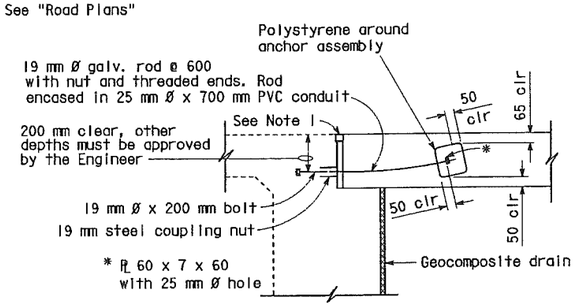

TIE DETAIL

APPROACH SLAB TRANSVERSE CONTACT JOINT		
APPROACH SKEW	WITH AC ROADWAY PAVEMENT	WITH PCC ROADWAY PAVEMENT
< 20°	Parallel to face of paving notch	Parallel to face of paving notch
20°- 45°	Parallel to face of P N use (Detail A)	Stagger lines 7.2 m to 10.8 m apart
> 45°	Parallel to face of P N use (Detail A)	Stagger at each lane line

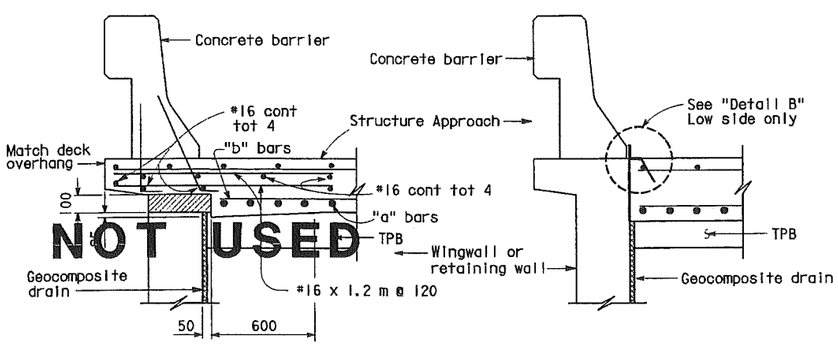

TYPE E-1 TYPE E-2

SECTION C-C

(Type E-1 to be used, unless otherwise shown on plans)

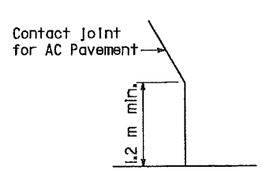

DETAIL A

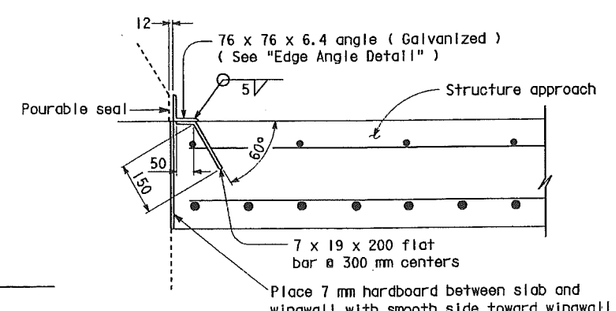

DETAIL B

NOTES:

1. For details not noted or shown, see Structure Plans.
2. For drainage details, see "Structure Approach Drainage Details" sheet.
3. Longitudinal construction joints, when permitted by the Engineer, shall be located on lane lines.
4. End angle at beginning of barrier transition, end of wingwall or end of structure approach, as applicable
5. For transverse contact joint with new PCC paving, refer to Standard Plan A35-A.
6. At the contractor's option, approach slab transverse reinforcement may be placed parallel to paving notch. Spacing of transverse reinforcement is measured along ℄ roadway.

Polystyrene to be removed.

NO SCALE

ALL DIMENSIONS ARE IN MILLIMETERS UNLESS OTHERWISE SHOWN

STANDARD DRAWING				
FILE NO. XS 22-24	DESIGN BY M. TRAFFALIS	CHECKED E. THORKILDSEN	APPROVAL RECOMMENDED BY	
DRAWING DATE 4/98	DETAILS BY R. YEE	CHECKED E. THORKILDSEN		
	SUBMITTED BY M. HA		DESIGN SUPERVISOR	

DS OSD 2147A (METRIC) (REV. 2/25/97)

ORIGINAL SCALE IN MILLIMETERS FOR REDUCED PLANS 0 10 20 30 40 50 60 70 80 90 100

STATE OF CALIFORNIA DEPARTMENT OF TRANSPORTATION

DIVISION OF STRUCTURES STRUCTURE DESIGN 12

CU 04 EA 285521

BRIDGE NO. 37-0582 | KILOMETER POST 16.7

PENITENCIA CREEK BRIDGE (REPLACE)

STRUCTURE APPROACH TYPE N(9D)

DISREGARD PRINTS BEARING EARLIER REVISION DATES

REVISION DATES (PRELIMINARY STAGE ONLY) 05-20-98 02-22-00 05-16-00

SHEET 14 OF 19

USERNAME => trclew akmsc03.dgn XS2224.DGN

DATE PLOTTED => 21-MAR-2001 TIME PLOTTED => 10:38

RELEASED 4-23-98

DIST.	COUNTY	ROUTE	KILOMETER POST TOTAL PROJECT	SHEET NO.	TOTAL SHEETS
04	SCl, Ala	880	15.3/16.9, R0.0/R0.7	432	495

Caltrans Metric

REGISTERED ENGINEER - CIVIL

3-5-01
PLANS APPROVAL DATE

REGISTERED PROFESSIONAL ENGINEER — Lugy Yong — No. 049908 — Exp. 09-30-04 — CIVIL — STATE OF CALIFORNIA

The State of California or its officers or agents shall not be responsible for the accuracy or completeness of electronic copies of this plan sheet.

Cal-Trans now has a web site! To get to the web site, go to: http://www.dot.ca.gov

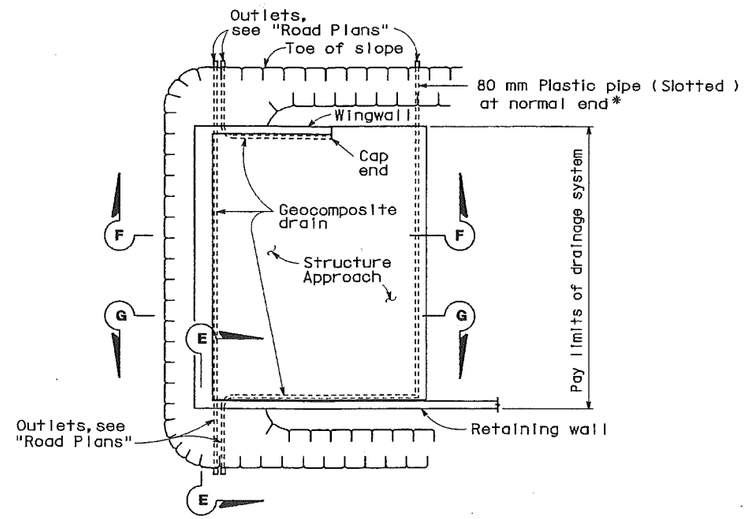

TYPICAL PLAN

*For pipe layout at staggered end, see "Detail B".

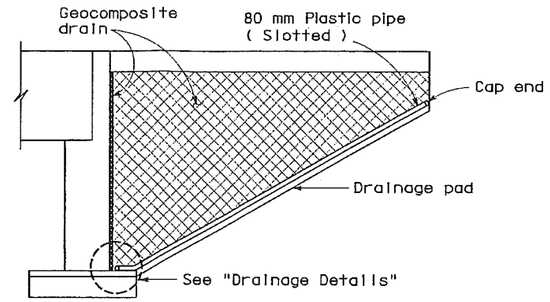

CANTILEVER WINGWALL
SECTION F-F

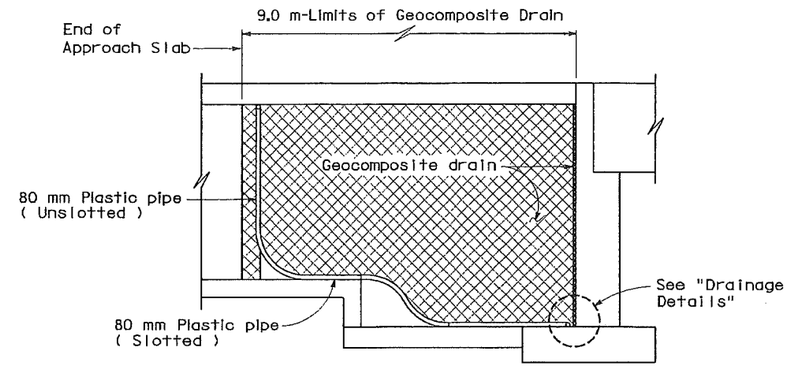

RETAINING WALL WINGWALL
SECTION G-G

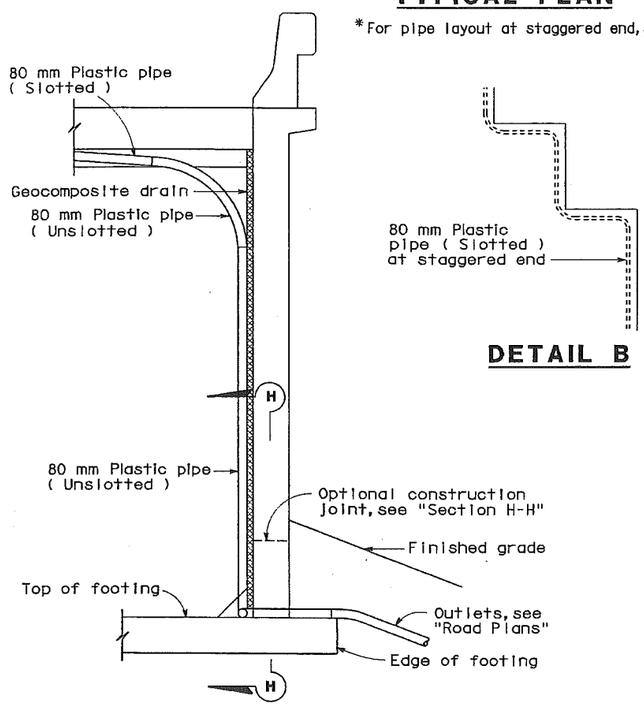

SECTION E-E

NOTE: Bends and junctions in 80 mm plastic pipe are 750 mm radius min.

DETAIL B

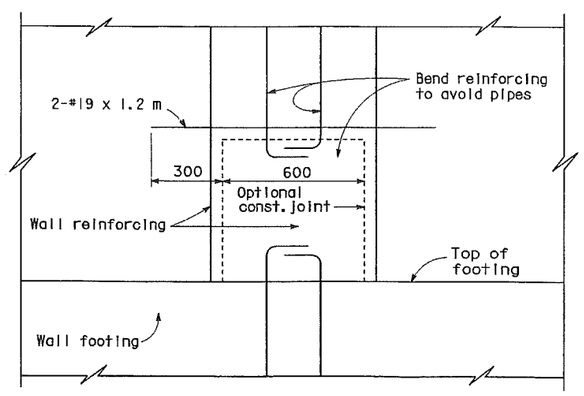

SECTION H-H

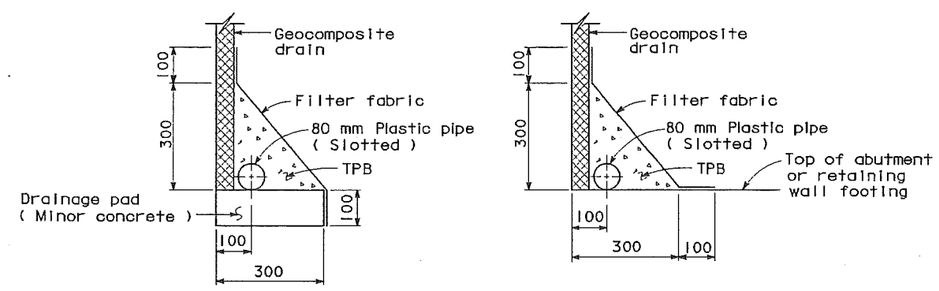

WITHOUT FOOTING **WITH FOOTING**

DRAINAGE DETAILS

NO SCALE
ALL DIMENSIONS ARE IN MILLIMETERS UNLESS OTHERWISE SHOWN

STANDARD DRAWING				
FILE NO. XS 22-17	DESIGN BY M. TRAFFALIS	CHECKED E. THORKILDSEN	APPROVAL RECOMMENDED BY	
DRAWING DATE 4/98	DETAILS BY R. YEE	CHECKED E. THORKILDSEN	DESIGN SUPERVISOR	
	SUBMITTED BY M. HA			

DS OSD 2147A (METRIC) (REV. 2/25/97)

STATE OF CALIFORNIA
DEPARTMENT OF TRANSPORTATION

DIVISION OF STRUCTURES
STRUCTURE DESIGN 12

CU 04
EA 285521

BRIDGE NO. 37-0582
KILOMETER POST 16.7

PENITENCIA CREEK BRIDGE (REPLACE)
STRUCTURE APPROACH DRAINAGE DETAILS

DISREGARD PRINTS BEARING EARLIER REVISION DATES

REVISION DATES (PRELIMINARY STAGE ONLY)

SHEET 15 OF 19

ORIGINAL SCALE IN MILLIMETERS FOR REDUCED PLANS 0 10 20 30 40 50 60 70 80 90 100

USERNAME => trclew okmsc04.dgn XS2217.DGN

TIME PLOTTED => 10:38
TE PLOTTED => 21-MAR-2001

DIST.	COUNTY	ROUTE	KILOMETER POST TOTAL PROJECT	SHEET NO.	TOTAL SHEETS
04	SCl, Ala	880	15.3/16.9, R0.0/R0.7	433	495

REGISTERED GEOLOGIST

3-5-01
PLANS APPROVAL DATE

REGISTERED GEOLOGIST M. RICHARDS No. 5240 Exp. 7-31-00 STATE OF CALIFORNIA

The State of California or its officers or agents shall not be responsible for the accuracy or completeness of electronic copies of this plan sheet.

Caltrans now has a web site! To get to the web site, go to: http://www.dot.ca.gov

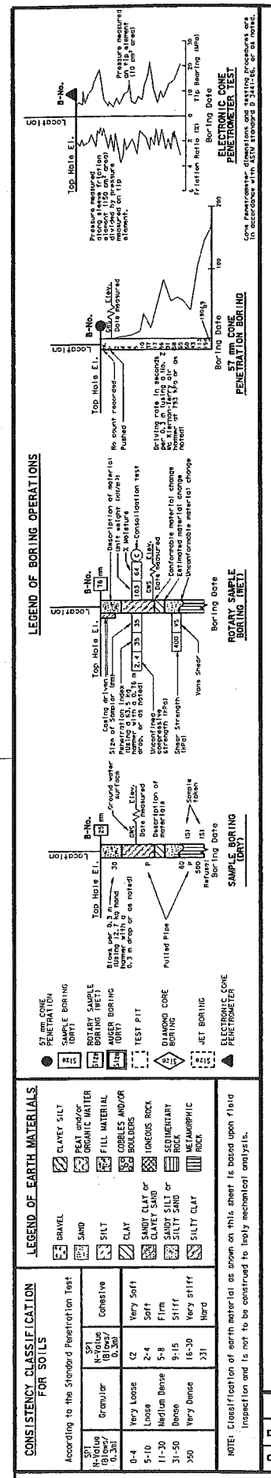

BENCH MARK

BM HV3 Elev. 4.159 m, NAVD 88'
Nail in SB shoulder Rte. 880, 16.17 m Lt. Sta. 105+657 "A" C/L Rte. 880.

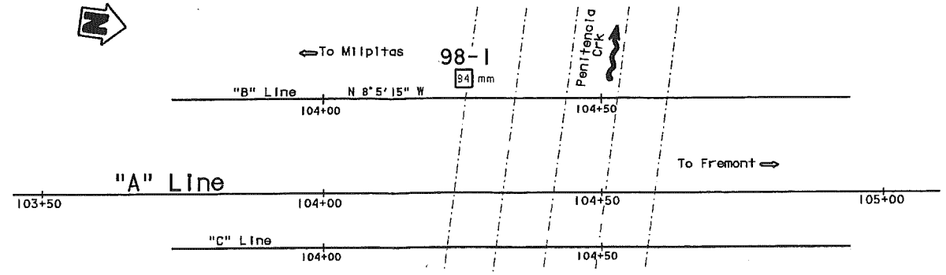

PLAN

1:500

NOTES:

1. Penetration index generated with CME (140 lb) 63.5 Kg auto hammer.
2. qu=unconfined compressive strength, kPa, measured by pocket penetrometer-field test.
3. Su= Shear strength, kPa, measured by Torr Vane-field test.
4. Ground water surface not measured.

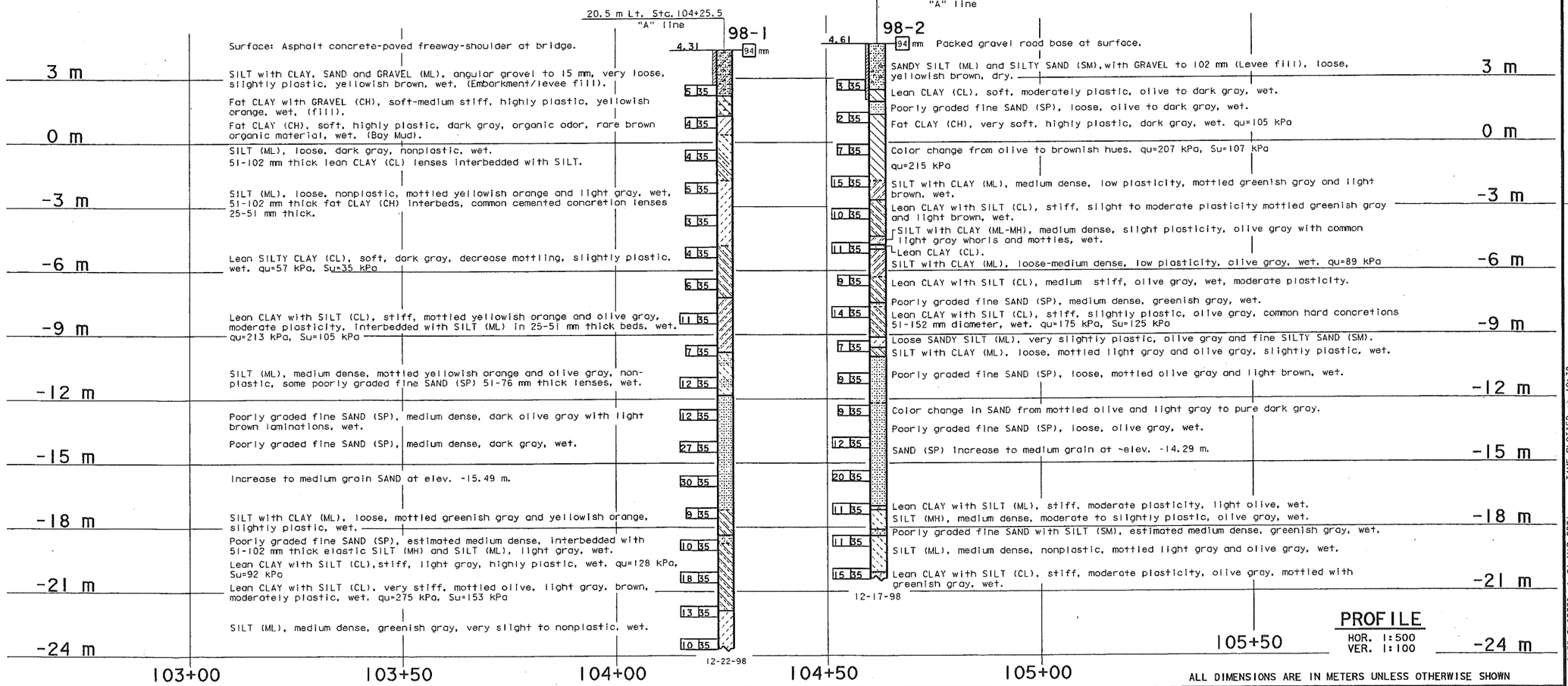

PROFILE

HOR. 1:500
VER. 1:100

ALL DIMENSIONS ARE IN METERS UNLESS OTHERWISE SHOWN

ENGINEERING SERVICE CENTER	STRUCTURE FOUNDATIONS
DRAWN BY	IRMA G-REMMEN 3/99
CHECKED BY	M. RICHARDS

FIELD INVESTIGATION BY: M. RICHARDS

STATE OF CALIFORNIA DEPARTMENT OF TRANSPORTATION

DIVISION OF STRUCTURES STRUCTURE DESIGN 12

CU 04
EA 285521

BRIDGE NO. 37-0582
KILOMETER POST 16.7

PENITENCIA CREEK BRIDGE (REPLACE)

LOG OF TEST BORINGS 1 OF 4

DISREGARD PRINTS BEARING EARLIER REVISION DATES

REVISION DATES (PRELIMINARY STAGE ONLY) 3-31-99 4-22-99

SHEET 16 OF 19

ORIGINAL SCALE IN MILLIMETERS FOR REDUCED PLANS 0 10 20 30 40 50 60 70 80 90 100

FILE => allitb.dgn

OSF GEOLOGIST LOG OF TEST BORINGS SHEET (METRIC) (REV. 11/18/97)

USERNAME => trclew DATE PLOTTED => 21-MAR-2001 TIME PLOTTED => 10:38

DIST.	COUNTY	ROUTE	POST MILES TOTAL PROJECT	SHEET NO.	TOTAL SHEETS
04	SCl	880			

REGISTERED - CERTIFIED ENGINEERING GEOLOGIST

PLANS APPROVAL DATE

REGISTERED GEOLOGIST R.C. WICHELMS No. 1719 Exp. 6-30-88 STATE OF CALIFORNIA

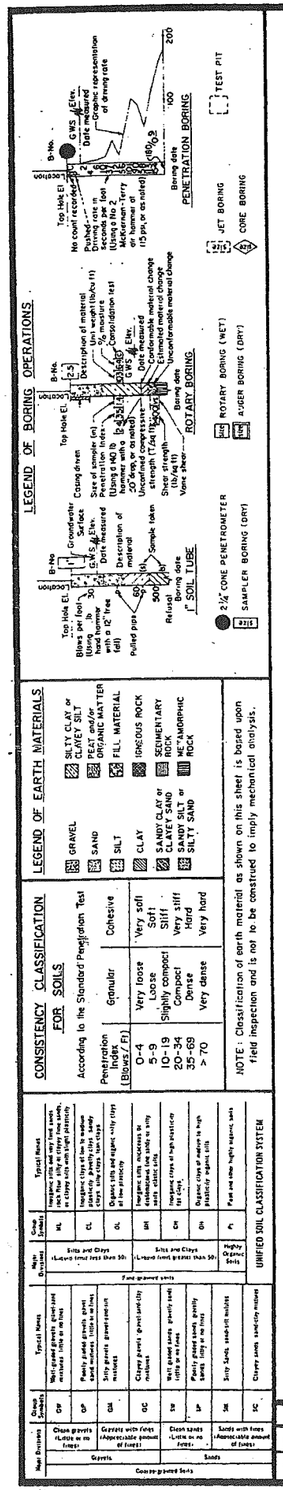

← To San Jose

To Fremont →

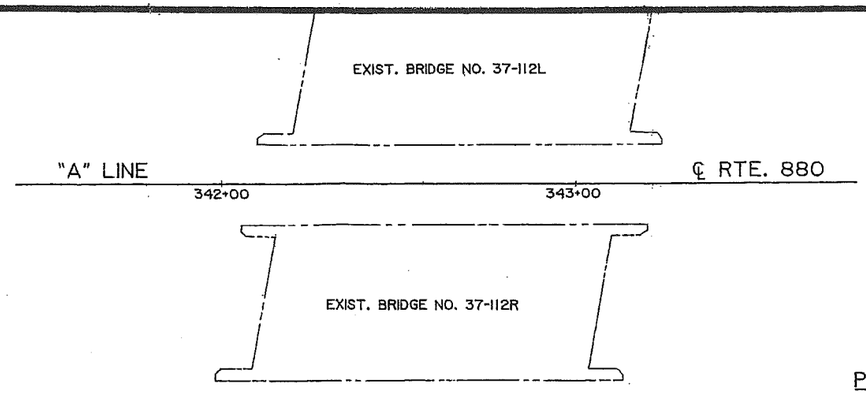

PLAN
1" = 20'

NOTES:

1. Equivalent metric "A" line stationing, as shown on the General Plan and LOTB sheet 1 of 8:

"A" Line English	"A" Line Metric
342+00	104+24
343+00	104+54.6

2. The equivalent metric stationing for Boring B-1 is 42.9 m Rt. Sta. 104+20, "B" line.

BENCH MARK
TBM "A" Elev. 13.74'
SUPPLIED BY DISTRICT 4 SURVEYS.

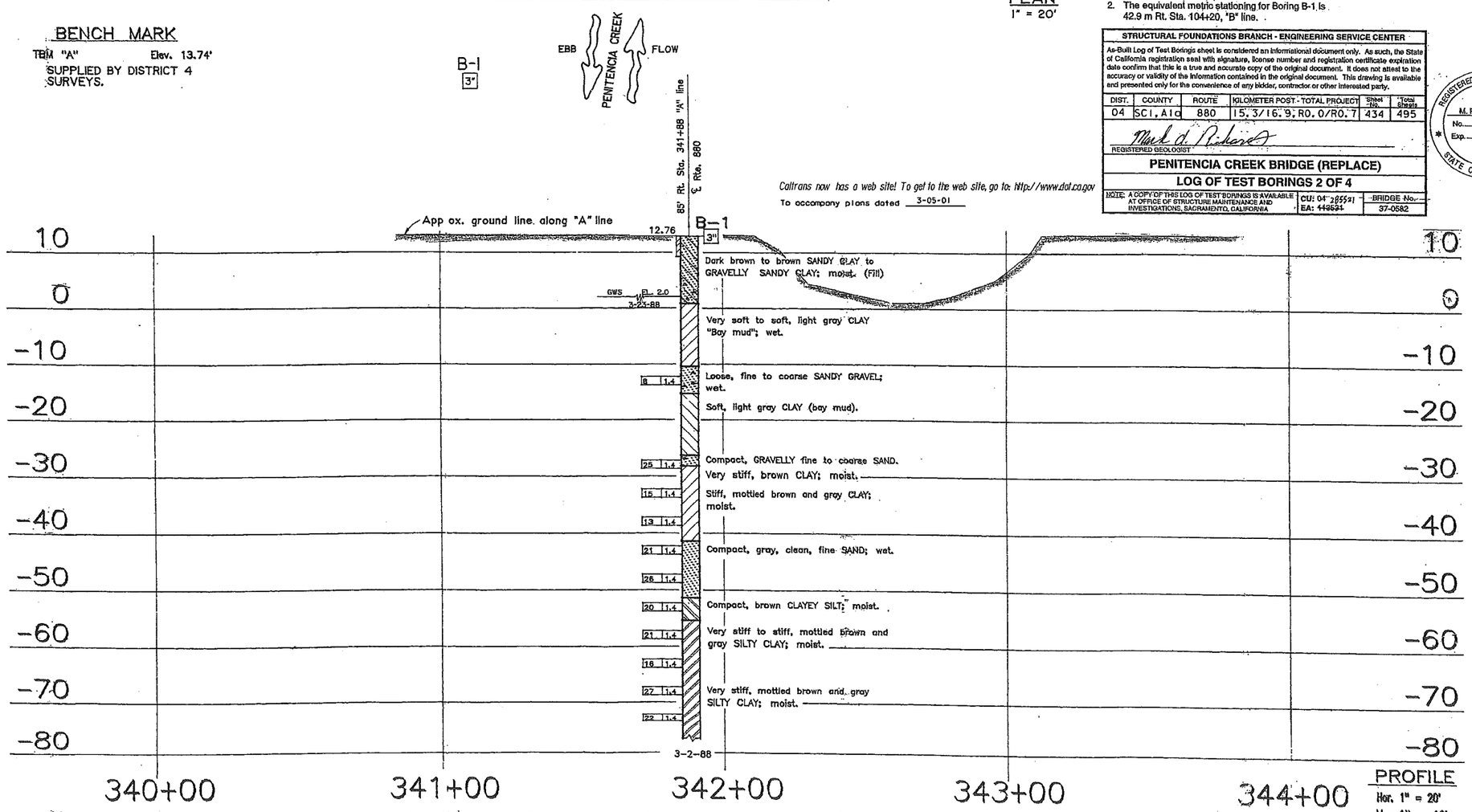

PROFILE
Hor. 1" = 20'
Ver 1" = 10'

Caltrans now has a web site! To get to the web site, go to: http://www.dot.ca.gov

To accompany plans dated 3-05-01

STRUCTURAL FOUNDATIONS BRANCH - ENGINEERING SERVICE CENTER

As-Built Log of Test Borings sheet is considered an informational document only. As such, the State of California registration seal with signature, license number and registration certificate expiration date confirm that this is a true and accurate copy of the original document. It does not attest to the accuracy or validity of the information contained in the original document. This drawing is available and presented only for the convenience of any bidder, contractor or other interested party.

DIST.	COUNTY	ROUTE	KILOMETER POST - TOTAL PROJECT	Sheet No.	Total Sheets
04	SCl, Alo	880	15.3/16.9, R0.0/R0.7	434	495

REGISTERED GEOLOGIST

PENITENCIA CREEK BRIDGE (REPLACE)

LOG OF TEST BORINGS 2 OF 4

NOTE: A COPY OF THIS LOG OF TEST BORINGS IS AVAILABLE AT OFFICE OF STRUCTURE MAINTENANCE AND INVESTIGATIONS, SACRAMENTO, CALIFORNIA

CU: 04-285521 EA: 448521

BRIDGE No. 37-0582

REGISTERED GEOLOGIST M. RICHARDS No. 5240 Exp. 7-31-00 STATE OF CALIFORNIA

GEOTECHNICAL BRANCH - TRANSPORTATION LABORATORY

DRAWN BY I.G. HOWELL 1/88

CHECKED BY

PROJECT ENGINEER 39499 CE NO.

CHARGE UNIT | EXPEND. AUTHOR. | SPEC. DESIGN.

State of CALIFORNIA DEPARTMENT OF TRANSPORTATION

STRUCTURES - DESIGN

PROJECT ENGINEER REGISTERED CIVIL ENGINEER NO.

BRIDGE NO. 37-112

POST MILE 10.4

PENITENCIA CREEK BRIDGE (WIDEN)

LOG OF TEST BORINGS 1 OF 3

ORIGINAL SCALE IN INCHES FOR REDUCED PLANS 0 1 2 3

CU 04 EA 112820

Disregard prints bearing earlier revision dates

REVISION DATES (PRELIMINARY STAGE ONLY)

SHEET 17 OF 19

br370582#02of04.tif

AS BUILT PLANS
Contract No. 53-417023

F-341 (10)

CAL. 86 118

IV SCL 69 A 6 8
JUNE 16 1952

I HEREBY CERTIFY THAT THIS IS A TRUE AND ACCURATE COPY OF THE ABOVE DOCUMENT TAKEN UNDER MY DIRECTION AND CONTROL ON THIS DATE IN SACRAMENTO, CALIFORNIA PURSUANT TO AUTHORIZATION BY THE DIRECTOR OF TRANSPORTATION.

DATE 1-28-80 SIGNATURE Joseph M. Cota TITLE SUPERVISOR OF MICROFILM SERVICES

BRIDGE DEPARTMENT

MICROFILMED

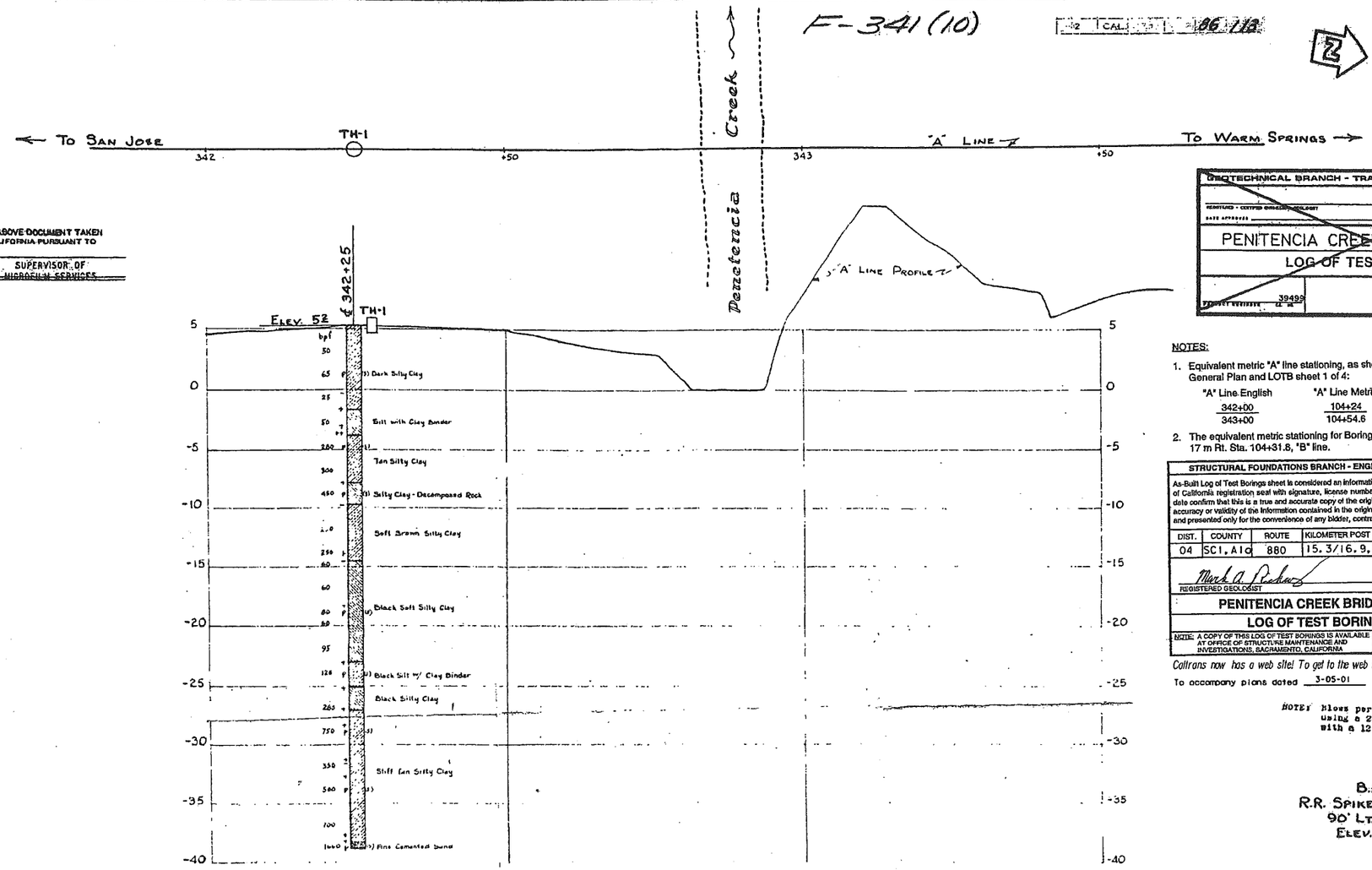

GEOTECHNICAL BRANCH - TRANSPORTATION LABORATORY

REGISTERED - CERTIFIED ENGINEERING GEOLOGIST

DATE APPROVED

PENITENCIA CREEK BRIDGE (WIDEN)

LOG OF TEST BORINGS 2 OF 3

PROJECT REFERENCE 39499 CU: 04 EA: 112820 BRIDGE No. 37-112

REGISTERED GEOLOGIST R.C. WILHELMS No. 1719 Exp. 6/30/88 STATE OF CALIFORNIA

NOTES:

1. Equivalent metric "A" line stationing, as shown on the General Plan and LOTB sheet 1 of 4:

"A" Line English	"A" Line Metric
342+00	104+24
343+00	104+54.6

2. The equivalent metric stationing for Boring TH-1 is 17 m Rt. Sta. 104+31.8, "B" line.

STRUCTURAL FOUNDATIONS BRANCH - ENGINEERING SERVICE CENTER

As-Built Log of Test Borings sheet is considered an informational document only. As such, the State of California registration seal with signature, license number and registration certificate expiration date confirm that this is a true and accurate copy of the original document. It does not attest to the accuracy or validity of the information contained in the original document. This drawing is available and presented only for the convenience of any bidder, contractor or other interested party.

DIST.	COUNTY	ROUTE	KILOMETER POST - TOTAL PROJECT	Sheet No.	Total Sheets
04	SCl, Alo	880	15.3/16.9, R0.0/R0.7	435	495

Mark A. Richards
REGISTERED GEOLOGIST

REGISTERED GEOLOGIST M. RICHARDS No. 5240 Exp. 7-31-00 STATE OF CALIFORNIA

PENITENCIA CREEK BRIDGE (REPLACE)

LOG OF TEST BORINGS 3 OF 4

NOTE: A COPY OF THIS LOG OF TEST BORINGS IS AVAILABLE AT OFFICE OF STRUCTURE MAINTENANCE AND INVESTIGATIONS, SACRAMENTO, CALIFORNIA

CU: 04 285521 EA: 113534 BRIDGE No. 37-0582

Caltrans now has a web site! To get to the web site, go to: http://www.dot.ca.gov

To accompany plans dated 3-05-01

NOTE: Blows per foot were made using a 28 lb. hand hammer with a 12 inch free fall

B.M.
R.R. SPIKE IN PWR. POLE
90' Lt. 344+00
Elev. 8.19

CLASSIFICATION OF MATERIAL BASED ON STANDARD GRADE SIZE LIMITS

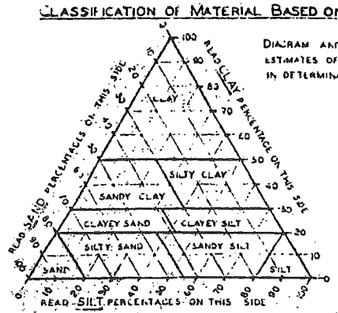

DIAGRAM AND TABLE SHOWING THE BASIS FOR ESTIMATES OF GRADE SIZE DISTRIBUTION USED IN DETERMINATION OF CLASS NAMES.

GROUPING USED IN TRIANGULAR CLASSIFICATION

CLASS NAME	PERCENTAGE OF SIZES PRESENT		
	SAND	SILT	CLAY
SAND	80-100	0-20	0-20
SILTY SAND	45-80	0-55	0-20
SANDY SILT	0-45	55-80	0-20
SILT	0-20	80-100	0-20
CLAYEY SAND	38-80	0-42	20-30
CLAYEY SILT	0-38	52-80	20-30
SANDY CLAY	50-70	0-40	30-50
SILTY CLAY	0-30	20-70	30-50
CLAY	0-50	0-30	50-100

IF GRAVEL IS PRESENT IN APPRECIABLE AMOUNTS THE TERM "GRAVELLY" MAY BE ADDED TO THE CLASS NAME, VIS. "GRAVELLY SAND". THE TERMS "COARSE", "MEDIUM" AND "FINE" WHEN USED TO DESCRIBE GRAVEL, SAND AND SILT REFER TO STANDARD GRADE SIZE LIMITS.

LEGEND OF BORING OPERATIONS

- HAND STARTED BORING
- 1" SAMPLER BORING
- ROTARY WASH BORING
- 1" CLOSED SAMPLER DRIVEN
- CONE BORING
- 2½" PENETROMETER DRIVEN
- 1⅜" SAMPLER BORING
- 2" TO 5" AUGER BORING
- 6" TO 20" AUGER BORING
- CASING DRIVEN
- JET BORING
- SAMPLE TAKEN
- 1⅜" A-ROD DRIVEN
- 2½" CONE PENETROMETER

THE APPROPRIATE BORING SYMBOLS DESIGNATING THE METHOD OF OPERATION ARE SHOWN AT THE UPPER RIGHT-HAND CORNER OF THE RESPECTIVE BORING. WHERE TOOL CHANGES WERE MADE DURING THE BORING OPERATION SYMBOLS ARE SHOWN AT THE POINT OF CHANGE.

LEGEND OF EARTH MATERIALS

- GRAVEL-G
- SAND-S
- SILT-SI
- CLAY-C
- SILTY SAND-S S
- CLAYEY SAND-C S
- SANDY SILT-S SI
- CLAYEY SILT-C SI
- SANDY CLAY-SC
- SILTY CLAY-SI C
- ROCK OR ROCK FRAGMENTS
- SANDSTONE-SS
- SHALE-SH
- BROKEN ROCK (FRAGMENTS)-(SR)
- ROCK-R
- FILL MATERIAL

ABBREVIATIONS

EL. 63.4	ELEVATION OF GROUND AT TEST HOLE
bpf	BLOWS PER FOOT-(SEE NOTE ABOVE
P	PUSHED PIPE
M	MOISTURE AS % DRY WEIGHT
▽ 52.3	ELEVATION OF GROUND WATER AND DATE

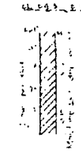

NOTES

THE CONTRACTOR'S ATTENTION IS DIRECTED TO SECTION 2, ARTICLE (L) OF THE STANDARD SPECIFICATIONS AND TO THE SPECIAL PROVISIONS ACCOMPANYING THIS SET OF PLANS.

CLASSIFICATION OF EARTH MATERIAL AS SHOWN ON THIS SHEET IS BASED UPON FIELD INSPECTION AND IS NOT TO BE CONSTRUED TO IMPLY MECHANICAL ANALYSIS.

AS BUILT
R. Lovley
CONTRACT NO. 53-417023
DATE 6-3-54
FIL. 12-17-75

BRIDGE ACROSS PENETENCIA CREEK
LOG OF TEST BORINGS

SCALE HORZ. 1" = 10' VERT. 1" = 5'
FILE 4.0
BRIDGE NO. 37-112 F/L
DRAWING NO. C-2991-B

SHEET	OF
18	19

F-341 (10)

2	CAL		95	710

DIST.	COUNTY	ROUTE	POST MILE	SHEET	TOTAL SHEETS
04	SCI	880	A	9	9

GEOTECHNICAL BRANCH - TRANSPORTATION LABORATORY

SUBMITTED - CERTIFIED GEOLOGIST

DATE APPROVED

PENITENCIA CREEK BRIDGE (WIDEN)

LOG OF TEST BORINGS 3OF3

PROJECT ENGINEER 39499 | CU: 04 EA: 112820 | BRIDGE No. 37-112

REGISTERED GEOLOGIST R.C. WILHELMS No. 1719 Exp. 6/30/88 STATE OF CALIFORNIA

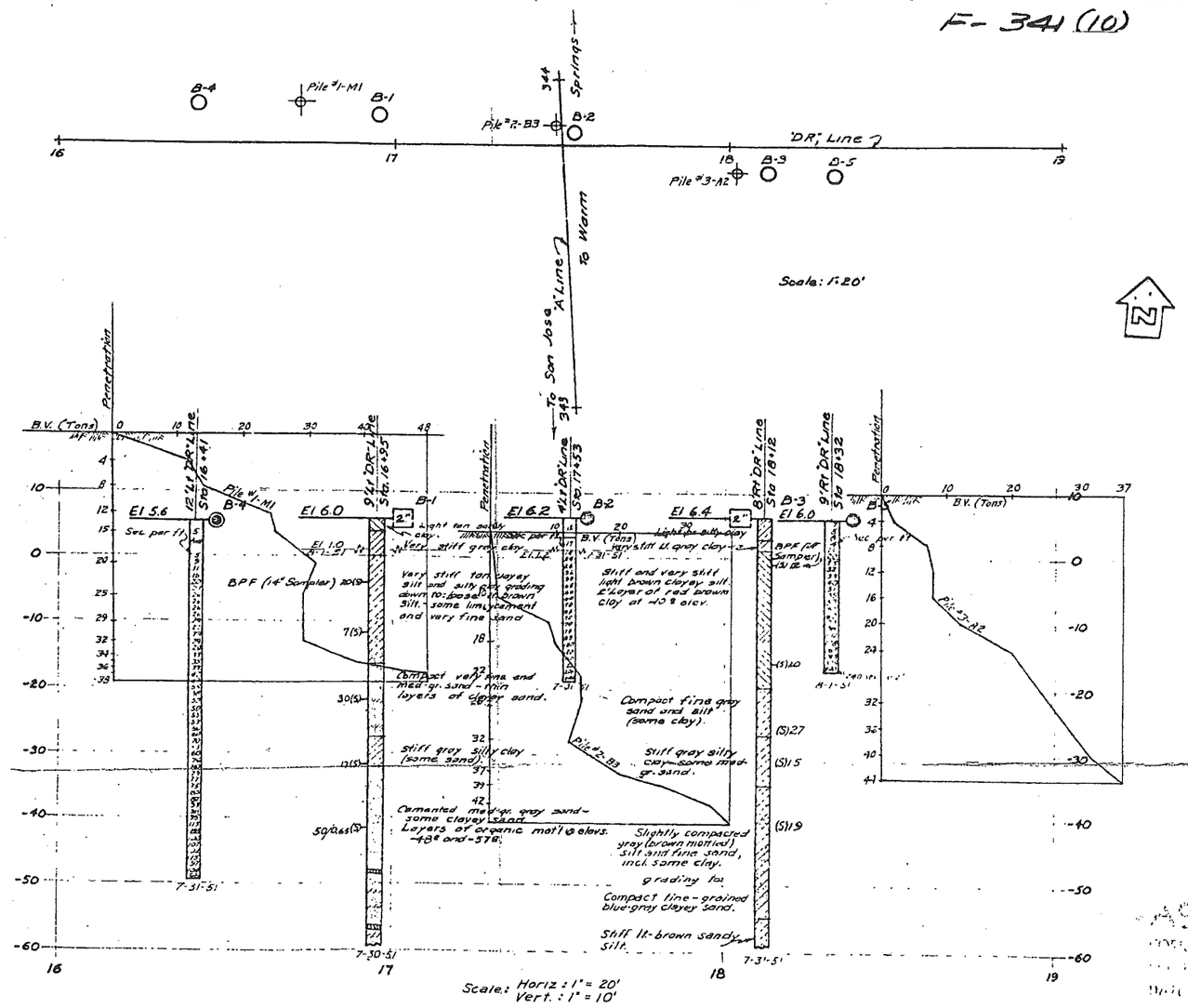

B.M. "A"
Chiselled □ in NW cor. of N.W. conc. footing of the 47' tower #4/34 - 700' Lt. of "A" 347+03 P.O.T. (Approx).
Elev. = 5.906

NOTES:

1. "D" line, metric intersection
   Existing "A Line, "D" 5+38.074± / "A" 105+03.213±
   "DR1" line, metric intersection
   Existing "A Line, "DR1" 5+33.633± / "A" 104+78.918±
   Bearing, "DR1" Line N 85°33'42" E
2. The equivalent metric line stationing is:

BORING	STATION	OFFSET FROM "D" LINE
B-1	5+25 ±	22.2 m Rt.±
B-2	5+39 ±	22.7 m Rt.±
B-3	5+59 ±	25.4 m Rt.±
B-4	5+10 ±	23.8 m Rt.±
B-5	5+65 ±	25.7 m Rt.±

STRUCTURAL FOUNDATIONS BRANCH - ENGINEERING SERVICE CENTER

As-Built Log of Test Borings sheet is considered an informational document only. As such, the State of California registration seal with signature, license number and registration certificate expiration date confirm that this is a true and accurate copy of the original document. It does not attest to the accuracy or validity of the information contained in the original document. This drawing is available and presented only for the convenience of any bidder, contractor or other interested party.

DIST.	COUNTY	ROUTE	KILOMETER POST - TOTAL PROJECT	Sheet No.	Total Sheets
04	SCI, A10	880	15.3/16.9, R0.0/R0.7	436	495

REGISTERED GEOLOGIST

PENITENCIA CREEK BRIDGE (REPLACE)

LOG OF TEST BORINGS 4 OF 4

NOTE: A COPY OF THIS LOG OF TEST BORINGS IS AVAILABLE AT OFFICE OF STRUCTURE MAINTENANCE AND INVESTIGATIONS, SACRAMENTO, CALIFORNIA | CU: 04 28552 EA: 113331 | BRIDGE No. 37-0582

REGISTERED GEOLOGIST M. RICHARDS No. 5240 Exp. 7-31-00 STATE OF CALIFORNIA

Relative rates of penetration obtained as follows:
B-1 & 3-(blows per foot): Driving 1.4" sampler with 140 lb hammer & 30" free fall.
B-2, 4 & 5-(seconds per foot): Driving Penetrometer or "A" Rod with No 2 McKiernan-Terry air hammer @ 115 psi gage pressure.

Caltrans now has a web site! To get to the web site, go to: http://www.dot.ca.gov

To accompany plans dated 3-05-01

AS BUILT
CORRECTIONS BY R. COLLEY
DATE 5-3-54
52-47C27
DEC 13 1979
AJC

CLASSIFICATION OF MATERIAL BASED ON STANDARD GRADE SIZE LIMITS

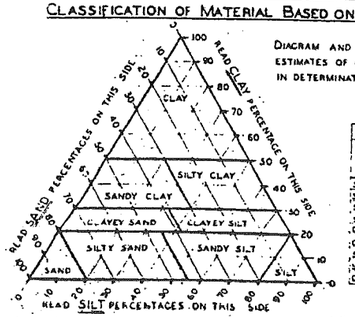

DIAGRAM AND TABLE SHOWING THE BASIS FOR ESTIMATES OF GRADE SIZE DISTRIBUTION USED IN DETERMINATION OF CLASS NAMES.

GROUPING USED IN TRIANGULAR CLASSIFICATION			
CLASS NAME	PERCENTAGE OF SIZES PRESENT		
	SAND	SILT	CLAY
SAND	80-100	0-20	0-20
SILTY SAND	45-80	0-55	0-20
SANDY SILT	0-45	55-80	0-20
SILT	0-20	80-100	0-20
CLAYEY SAND	55-80	0-42	20-30
CLAYEY SILT	0-55	42-80	20-30
SANDY CLAY	30-70	0-40	30-50
SILTY CLAY	0-30	20-70	30-50
CLAY	0-30	0-50	50-100

IF GRAVEL IS PRESENT IN APPRECIABLE AMOUNTS THE TERM "GRAVELLY" MAY BE ADDED TO THE CLASS NAME, E.G. "GRAVELLY SAND". THE TERMS "COARSE", "MEDIUM" AND "FINE" WHEN USED TO DESCRIBE GRAVEL, SAND AND SILT REFER TO STANDARD GRADE SIZE LIMITS

LEGEND OF BORING OPERATIONS

- PLAN OF ANY BORING
- 1" SAMPLER BORING
- ROTARY WASH BORING
- 1" CLOSED SAMPLER DRIVEN
- CORE BORING
- 2½" PENETROMETER DRIVEN
- 1⅜" SAMPLER BORING
- 2"-10.5" AUGER BORING
- 6"-10.0" AUGER BORING
- CASING DRIVEN
- JET BORING
- (S) SAMPLE TAKEN
- 1⅜" A-ROD DRIVEN

THE APPROPRIATE BORING SYMBOLS DESIGNATING THE METHOD OF OPERATION ARE SHOWN AT THE UPPER RIGHT-HAND CORNER OF THE RESPECTIVE BORING. WHERE TOOL CHANGES WERE MADE DURING THE BORING OPERATION SYMBOLS ARE SHOWN AT THE POINT OF CHANGE

LEGEND OF EARTH MATERIALS

- GRAVEL - G
- SAND - S
- SILT - SI
- CLAY - C
- SILTY SAND - SI S
- CLAYEY SAND - C S
- SANDY SILT - S SI
- CLAYEY SILT - C SI
- SANDY CLAY - S C
- SILTY CLAY - SI C
- PEAT and/or ORGANIC CLAY - O
- SANDSTONE - SS
- SHALE - SH
- BROKEN ROCK (FRAGMENTS) - BR
- ROCK - R
- FILL MATERIAL

ABBREVIATIONS

EL 69.4	ELEVATION OF GROUND AT TEST HOLE
bpf	BLOWS PER FOOT - (SEE NOTE ABOVE)
P	PULLED PIPE
M	MOISTURE AS % DRY WEIGHT
EL 6.2 ▽ 6-15-00	ELEVATION OF GROUND WATER AND DATE

NOTES

THE CONTRACTOR'S ATTENTION IS DIRECTED TO SECTION 2, ARTICLE (C) OF THE STANDARD SPECIFICATIONS AND TO THE SPECIAL PROVISIONS ACCOMPANYING THIS SET OF PLANS

CLASSIFICATION OF EARTH MATERIAL AS SHOWN ON THIS SHEET IS BASED UPON FIELD INSPECTION AND IS NOT TO BE CONSTRUED TO IMPLY MECHANICAL ANALYSIS.

SHEET	OF
19	19

DIXON ROAD OVERCROSSING
LOG OF TEST BORINGS
SCALE AS SHOWN
37-110

DIST.	COUNTY	ROUTE	KILOMETER POST TOTAL PROJECT	SHEET NO.	TOTAL SHEETS
04	SCl, Ala	880	15.3/16.9, R0.0/R0.7	437	495

Caltrans Metric

Luqi Yang
REGISTERED ENGINEER - CIVIL

3-5-01
PLANS APPROVAL DATE

REGISTERED PROFESSIONAL ENGINEER — Luqi Yang, No. 49908, Exp. 09-30-04, CIVIL, STATE OF CALIFORNIA

The State of California or its officers or agents shall not be responsible for the accuracy or completeness of electronic copies of this plan sheet.

Caltrans now has a web site! To get to the web site, go to: http://www.dot.ca.gov

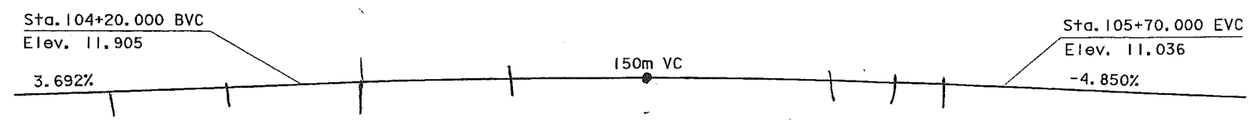

PROFILE GRADE

No scale

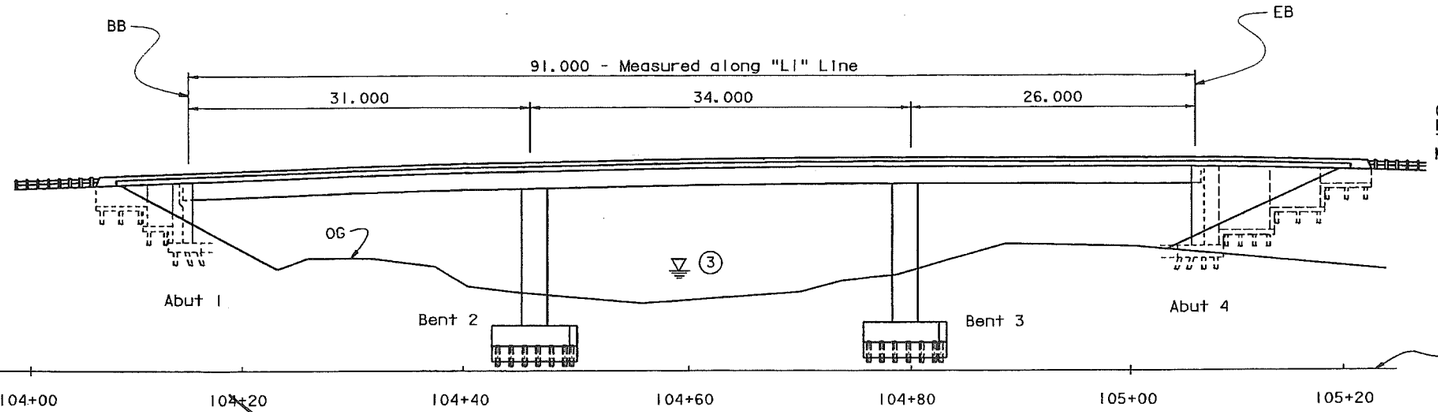

ELEVATION

1:250

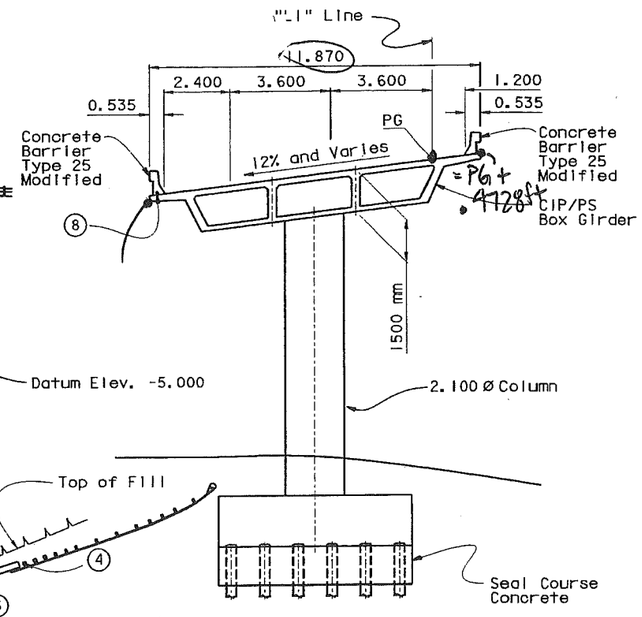

TYPICAL SECTION

Scale 1:100

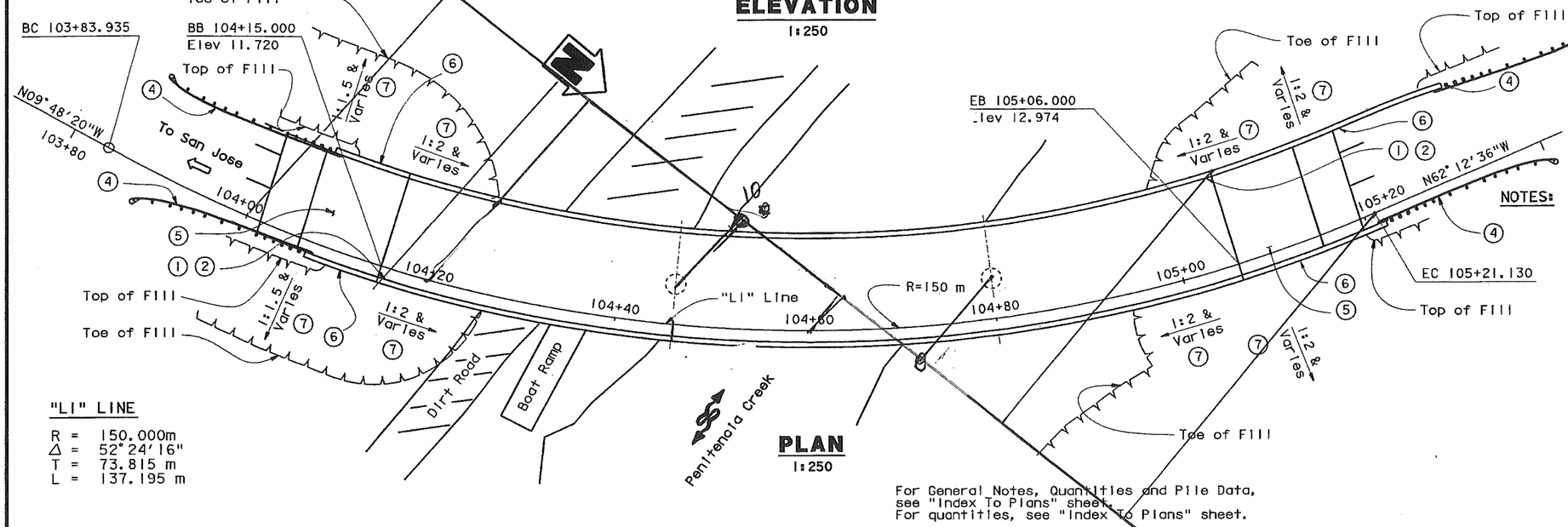

PLAN

1:250

"LI" LINE

R = 150.000m
Δ = 52°24'16"
T = 73.815 m
L = 137.195 m

For General Notes, Quantities and Pile Data, see "Index To Plans" sheet.
For quantities, see "Index To Plans" sheet.

NOTES:

1. Paint "Br. No. 37-0582K"
2. Paint "Penitencia Creek BR"
3. For Hydrologic Information, see "Foundation Plan"
4. MBGR, See "Road Plans"
5. Structure Approach Type N(14D)
6. Retaining Wall
7. Slope Of Fill, See "Road Plans"
8. 40 mm ø Electrical Conduit, See "Road Plans"

Standard Plan Sheet No.
Detail No.

ALL DIMENSIONS ARE IN METERS UNLESS OTHERWISE SHOWN

DESIGN ENGINEER	DESIGN	BY Luqi Yang	CHECKED Tony Huang	LOAD FACTOR DESIGN	LIVE LOADING: HS20-44 AND ALTERNATIVE AND PERMIT DESIGN LOAD
	DETAILS	BY Stevy Lee	CHECKED Tony Huang	LAYOUT	BY Luqi Yang / CHECKED Tony Huang
	QUANTITIES	BY Javid Sharifi	CHECKED Bill Addlespurger	SPECIFICATIONS	BY Ken Darby/Simona Dollaga / PLANS AND SPECS COMPARED

STATE OF CALIFORNIA
DEPARTMENT OF TRANSPORTATION

DIVISION OF STRUCTURES
STRUCTURE DESIGN 12

BRIDGE NO. 37-0582K
KILOMETER POST 16.7

PENITENCIA CREEK BR (ON-RAMP)
GENERAL PLAN

STRUCTURES DESIGN GENERAL PLAN SHEET (METRIC) (REV. 4/15/97)

ORIGINAL SCALE IN MILLIMETERS FOR REDUCED PLANS 0 10 20 30 40 50 60 70 80 90 100

CU 04
EA 285521

FILE => cagp0.dgn

DISREGARD PRINTS BEARING EARLIER REVISION DATES

REVISION DATES (PRELIMINARY STAGE ONLY) 3-21-00 05-10-00 05-26-00 09-05-00 09-07-00

SHEET 1 OF 22

USERNAME => trc1bw DATE PLOTTED => 21-MAR-2001 TIME PLOTTED => 10:39

DIST	COUNTY	ROUTE	KILOMETER POST TOTAL PROJECT	SHEET No	TOTAL SHEETS
04	SCl, Ala	880	5.3/16.9, R0.0/R0.7	438	495

Caltrans Metric

Luqi Yang
REGISTERED CIVIL ENGINEER

3-5-01
PLANS APPROVAL DATE

REGISTERED PROFESSIONAL ENGINEER Luqi Yang No. 49908 Exp. 09-30-04 CIVIL STATE OF CALIFORNIA

The State of California or its officers or agents shall not be responsible for the accuracy or completeness of electronic copies of this plan sheet.

Caltrans now has a web site! To get to the web site, go to: http://www.dot.ca.gov

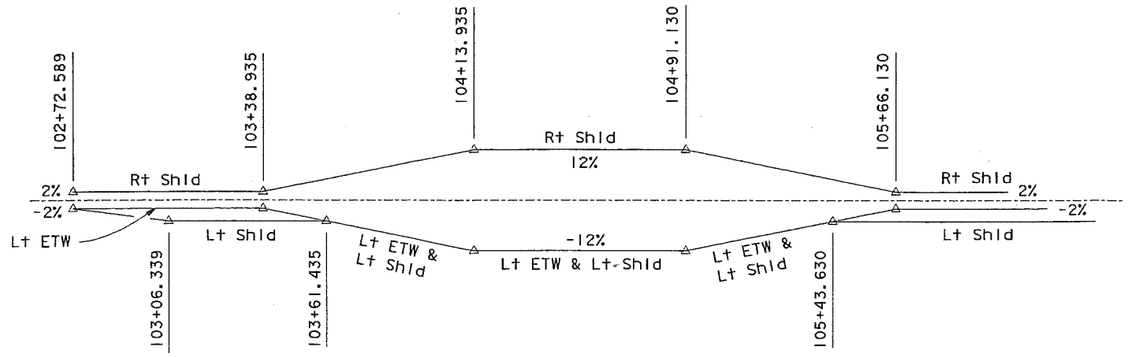

SUPERELEVATION DIAGRAM

No Scale

STANDARD PLANS DATED JULY 1999

A10A	ABBREVIATIONS
A10B	SYMBOLS
A62B	LIMITS OF PAYMENT FOR EXCAVATION AND BACKFILL BRIDGE SURCHARGE AND WALL
A62C	LIMITS OF PAYMENT FOR EXCAVATION AND BACKFILL BRIDGE
B0-1	BRIDGE DETAILS
B0-3	BRIDGE DETAILS
B0-5	BRIDGE DETAILS
B013	BRIDGE DETAILS
B2-6	PILE DETAILS CLASS 400C AND CLASS 625C
B2-8	PILE DETAILS CLASS 900 AND CLASS 900C
B3-1	RETAINING WALL TYPE 1 H=1200 THROUGH H=9100 mm
B3-8	RETAINING WALL DETAILS NO. 1
B6-21	JOINT SEALS (MAXIMUM MOVEMENT RATING = 50 mm)
B7-1	BOX GIRDER DETAILS
B8-5	CAST-IN-PLACE PRESTRESSED GIRDER DETAILS
B11-53	CONCRETE BARRIER TYPE 25

INDEX TO PLANS

SHEET NO.	TITLE
1	GENERAL PLAN
2	INDEX TO PLANS
3	DECK CONTOURS
4	FOUNDATION PLAN
5	ABUTMENT 1 LAYOUT
6	ABUTMENT 1 DETAILS
7	ABUTMENT 4 LAYOUT
8	ABUTMENT 4 DETAILS
9	RETAINING WALL DETAILS NO. 1
10	RETAINING WALL DETAILS NO. 2
11	RETAINING WALL DETAILS NO. 3
12	RETAINING WALL DETAILS NO. 4
13	BENT DETAILS NO. 1
14	BENT DETAILS NO. 2
15	TYPICAL SECTION
16	GIRDER LAYOUT
17	GIRDER REINFORCEMENT
18	STRUCTURE APPROACH TYPE N(14D) DETAILS NO. 1
19	STRUCTURE APPROACH TYPE N(14D) DETAILS NO. 2
20	STRUCTURE APPROACH DRAINAGE DETAILS
21	LOG OF TEST BORINGS 1 OF 2
22	LOG OF TEST BORINGS 2 OF 2

PILE DATA TABLE

LOCATION	PILE TYPE	DESIGN LOADING	NORMAL RESISTANCE COMPRESSION	NORMAL RESISTANCE TENSION	DESIGN TIP ELEVATION (m)	SPECIFIED TIP ELEVATION (m)
Abut 1	CLASS 900C ALTERNATIVE 'X'	900 kN	1800 kN	0 kN	-22 (1)	-22 (1)
Bent 2	CLASS 900C ALTERNATIVE 'X'	900 kN	1800 kN	900 kN	-22 (1), -12 (2), -17 (3)	-22 (1)
Bent 3	CLASS 900C ALTERNATIVE 'X'	900 kN	1800 kN	900 kN	-25 (1), -19 (2), -17 (3)	-25 (1)
Abut 4	CLASS 900C ALTERNATIVE 'X'	900 kN	1800 kN	0 kN	-25 (1)	-25 (1)
RET WALL Abut 1	CLASS 400C ALTERNATIVE 'X'	400 kN	800 kN	0 kN	-12.2 (1)	-12.2 (1)
RET WALL Abut 4	CLASS 400C ALTERNATIVE 'X'	400 kN	800 kN	0 kN	-18 (1)	-18 (1)

Note:
Design Tip Elevation is controlled by the following demands:
(1) Compression, (2) Tension, (3) Lateral Loads

GENERAL NOTES
LOAD FACTOR DESIGN

DESIGN: BRIDGE DESIGN SPECIFICATIONS (1983 AASHTO with Interims and Revisions by CALTRANS)

SEISMIC DESIGN: Seismic Design Criteria (SDC) by Caltrans Version 1.1 July 1999

DEAD LOAD: Includes 1.68 KPa for future wearing surface.

LIVE LOADING: HS20-44 and alternative and permit design load.

SEISMIC LOADING: See "Site Specific ARS Curve" on "Deck Contours" sheet.

REINFORCED CONCRETE:
f_y = 420 MPa
f'_c = 28 Mpa
n = 8
Transverse Deck Slabs (Working Stress Design)
f_s = 140 MPa
f_c = 8 MPa
n = 10

PRESTRESSED CONCRETE: See "Prestressing Notes" on "Bent Details No.2" sheet.

BACKFILL: Lightweight aggregate material shall be used at abutments and retaining walls.

QUANTITIES

Structure Excavation (Bridge)	480 m^3
Structure Excavation (Type A)	785 m^3
Structure Excavation (Retaining Wall)	505 m^3
Structure Backfill (Bridge) (Lightweight Aggregate)	360 m^3
Structure Backfill (Retaining Wall) (Lightweight Aggregate)	399 m^3
Furnish Piling (Class 900C) (Alt X)	2484 m
Drive Piling (Class 900C) (Alt X)	105 ea
Furnish Piling (Class 400C) (Alt X)	1614 m
Drive Piling (Class 400C) (Alt X)	64 ea
Prestressing Cast-In-Place Concrete	Lump Sum
Seal Course Concrete	120 m^3
Structural Concrete, Bridge Footing	273 m^3
Structural Concrete, Bridge	768 m^3
Structural Concrete, Retaining Wall	138 m^3
Structural Concrete, Approach Slab (Type N)	110 m^3
Architectural Treatment	67 m^2
Joint Seal (MR=50 mm)	25 m
Bar Reinforcing Steel (Bridge)	133 400 kg
Bar Reinforcing Steel (Retaining Wall)	12 500 kg
Concrete Barrier (Type 25 Modified)	233 m

ALL DIMENSIONS ARE IN MILLIMETERS UNLESS OTHERWISE SHOWN

DESIGN	BY Luqi Yang	CHECKED Tony Huang
DETAILS	BY Stevy Lee	CHECKED Tony Huang
QUANTITIES	BY Javid Sharifi	CHECKED Bill Addlespurger

STATE OF CALIFORNIA
DEPARTMENT OF TRANSPORTATION

DIVISION OF STRUCTURES
STRUCTURE DESIGN 12

BRIDGE NO. 37-0582K
KILOMETER POST 16.7

PENITENCIA CREEK BR (ON-RAMP)
INDEX TO PLANS

STRUCTURES DESIGN DETAIL SHEET (METRIC) (REV. 3/1/99)

ORIGINAL SCALE IN MILLIMETERS FOR REDUCED PLANS 0 10 20 30 40 50 60 70 80 90 100

CU 04
EA 285521

DISREGARD PRINTS BEARING EARLIER REVISION DATES

REVISION DATES (PRELIMINARY STAGE ONLY) 3-24-00 05-18-00 06-07-00 03-26-00

SHEET 2 OF 22

FILE => caltp.dgn

USERNAME => ~lew DATE PLOTTED => 21-MAR-2001 TIME PLOTTED => 10:39

DIST	COUNTY	ROUTE	KILOMETER POST TOTAL PROJECT	SHEET No	TOTAL SHEETS
04	SCl, Ala	880	15.3/16.9, R0.0/R0.7	439	495

Caltrans Metric

REGISTERED CIVIL ENGINEER

3-5-01
PLANS APPROVAL DATE

REGISTERED PROFESSIONAL ENGINEER
Luqi Yang
No. 49908
Exp. 09-30-04
CIVIL
STATE OF CALIFORNIA

The State of California or its officers or agents shall not be responsible for the accuracy or completeness of electronic copies of this plan sheet.

Caltrans now has a web site! To get to the web site, go to: http://www.dot.ca.gov

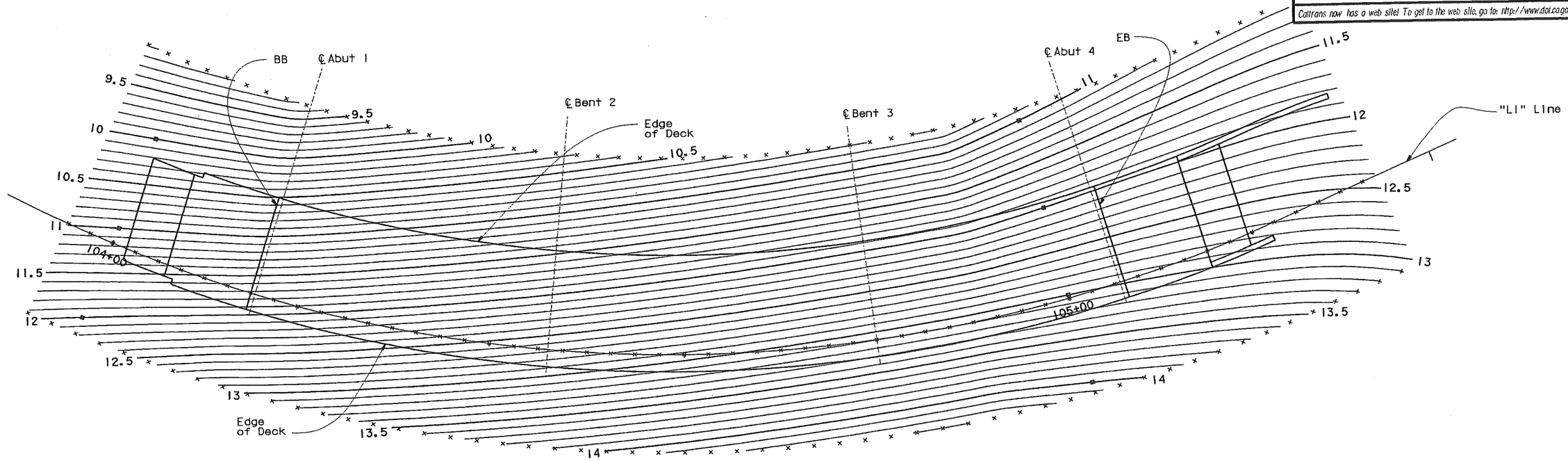

PLAN
1:200

Notes:
□ - Indicates even meter contours.
x - 2.5 m intervals along station line.
Contours do not include camber.
Contour interval = 0.10m

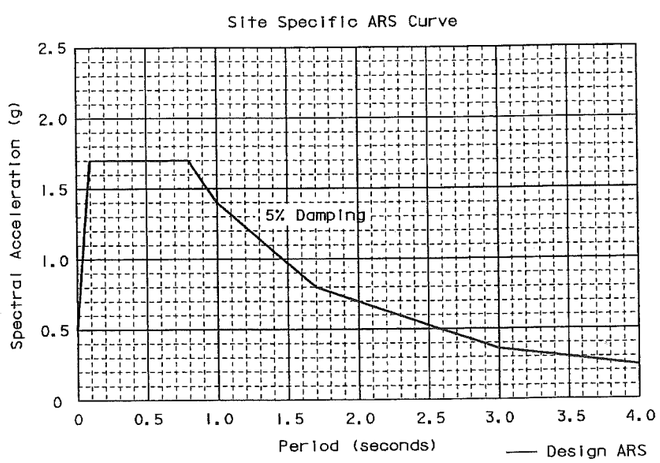

ALL DIMENSIONS ARE IN METERS UNLESS OTHERWISE SHOWN

DESIGN	BY Luqi Yang	CHECKED Tony Huang
DETAILS	BY Stevy Lee	CHECKED Tony Huang
QUANTITIES	BY David Sharifi	CHECKED Bill Addlespurger

STATE OF CALIFORNIA
DEPARTMENT OF TRANSPORTATION

DIVISION OF STRUCTURES
STRUCTURE DESIGN 12

BRIDGE NO. 37-0582K
KILOMETER POST 16.7

PENITENCIA CREEK BR (ON-RAMP)
DECK CONTOURS

CU 04
EA 285521

DISREGARD PRINTS BEARING EARLIER REVISION DATES → 05-10-00

REVISION DATES (PRELIMINARY STAGE ONLY)

SHEET 3 OF 22

STRUCTURES DESIGN DETAIL SHEET (METRIC) (REV. 3/1/99)

ORIGINAL SCALE IN MILLIMETERS FOR REDUCED PLANS 0 10 20 30 40 50 60 70 80 90 100

FILE => cbdkc.dgn

USERNAME => tr-clew DATE PLOTTED => 21-MAR-2001 TIME PLOTTED => 10:39

DIST	COUNTY	ROUTE	KILOMETER POST TOTAL PROJECT	SHEET NO.	TOTAL SHEETS
04	SCl, Ala	880	15.3/16.9, R0.0/R0.7	440	495

Caltrans Metric

Luqi Yang
REGISTERED ENGINEER - CIVIL

3-5-01
PLANS APPROVAL DATE

REGISTERED PROFESSIONAL ENGINEER — Luqi Yang No. 049908 Exp. 09-30-04 CIVIL — STATE OF CALIFORNIA

The State of California or its officers or agents shall not be responsible for the accuracy or completeness of electronic copies of this plan sheet.

Caltrans now has a web site! To get to the web site, go to: http://www.dot.ca.gov

NO	R	Δ	T	L
1	150	52°24'16"	73.815	137.195
2	1000.00	2°51'53"	25.00	50.00
3	260.00	3°54'32"	8.87	17.74

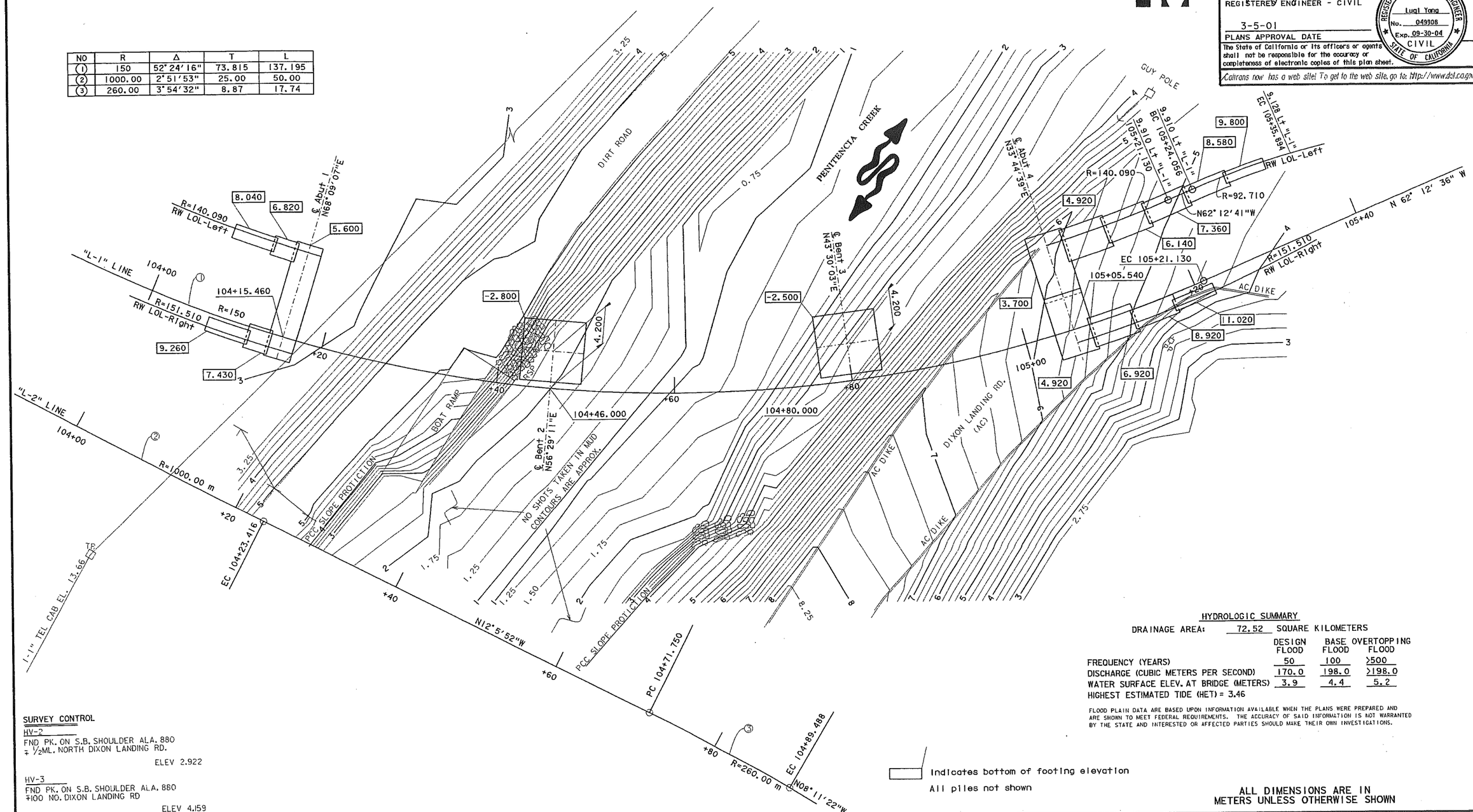

HYDROLOGIC SUMMARY

DRAINAGE AREA: 72.52 SQUARE KILOMETERS

	DESIGN FLOOD	BASE FLOOD	OVERTOPPING FLOOD
FREQUENCY (YEARS)	50	100	>500
DISCHARGE (CUBIC METERS PER SECOND)	170.0	198.0	>198.0
WATER SURFACE ELEV. AT BRIDGE (METERS)	3.9	4.4	5.2

HIGHEST ESTIMATED TIDE (HET) = 3.46

FLOOD PLAIN DATA ARE BASED UPON INFORMATION AVAILABLE WHEN THE PLANS WERE PREPARED AND ARE SHOWN TO MEET FEDERAL REQUIREMENTS. THE ACCURACY OF SAID INFORMATION IS NOT WARRANTED BY THE STATE AND INTERESTED OR AFFECTED PARTIES SHOULD MAKE THEIR OWN INVESTIGATIONS.

SURVEY CONTROL

HV-2
FND PK. ON S.B. SHOULDER ALA. 880
± 1/2ML. NORTH DIXON LANDING RD.
ELEV 2.922

HV-3
FND PK. ON S.B. SHOULDER ALA. 880
±100 NO. DIXON LANDING RD
ELEV 4.159

Indicates bottom of footing elevation
All piles not shown

ALL DIMENSIONS ARE IN METERS UNLESS OTHERWISE SHOWN

PRELIMINARY INVESTIGATION SECTION

SCALE 1:200	VERT. DATUM NAVD 88	PHOTOGRAMMETRY AS OF:	DRAWN BY M. ZUBEIDI 10/97
	HORZ. DATUM NAD 83	SURVEYED BY P. CRITES 7/97	TRACED BY M. ZUBEIDI 10/97
ALIGNMENT TIES DISTRICT		FIELD CHECKED BY	CHECKED BY J. RING 10/97

STRUCTURES FOUNDATION PLAN SHEET (METRIC) (REV. 6/9/97)

	BY	CHECKED
DESIGN	Luqi Yang	Tony Huang
DETAILS	K Christopher	Tony Huang
QUANTITIES	Javid Sharifi	Bill Addlespurger

ORIGINAL SCALE IN MILLIMETERS FOR REDUCED PLANS 0 10 20 30 40 50 60 70 80 90 100

STATE OF CALIFORNIA
DEPARTMENT OF TRANSPORTATION

DIVISION OF STRUCTURES
STRUCTURE DESIGN 12

CU 04
EA 285521

FILE => ccfnd.dgn

BRIDGE NO. 37-0582K
KILOMETER POST 16.7

PENITENCIA CREEK BR (ON-RAMP)
FOUNDATION PLAN

DISREGARD PRINTS BEARING EARLIER REVISION DATES → 10-22-97 02-11-98 02-02-99 01-18-00 02-28-00 03-07-00 05-27-00

SHEET	OF
4	22

USERNAME

DATE PLOTTED => 21-MAR-2001 TIME PLOTTED => 10:39

DIST	COUNTY	ROUTE	KILOMETER POST TOTAL PROJECT	SHEET No	TOTAL SHEETS
04	SCl, Ala	880	15.3/16.9, R0.0/R0.7	441	495

Caltrans Metric

REGISTERED CIVIL ENGINEER

3-5-01
PLANS APPROVAL DATE

REGISTERED PROFESSIONAL ENGINEER Lugi Yang No. 049908 Exp. 09-30-04 CIVIL STATE OF CALIFORNIA

The State of California or its officers or agents shall not be responsible for the accuracy or completeness of electronic copies of this plan sheet.

Caltrans now has a web site! To get to the web site, go to: http://www.dot.ca.gov

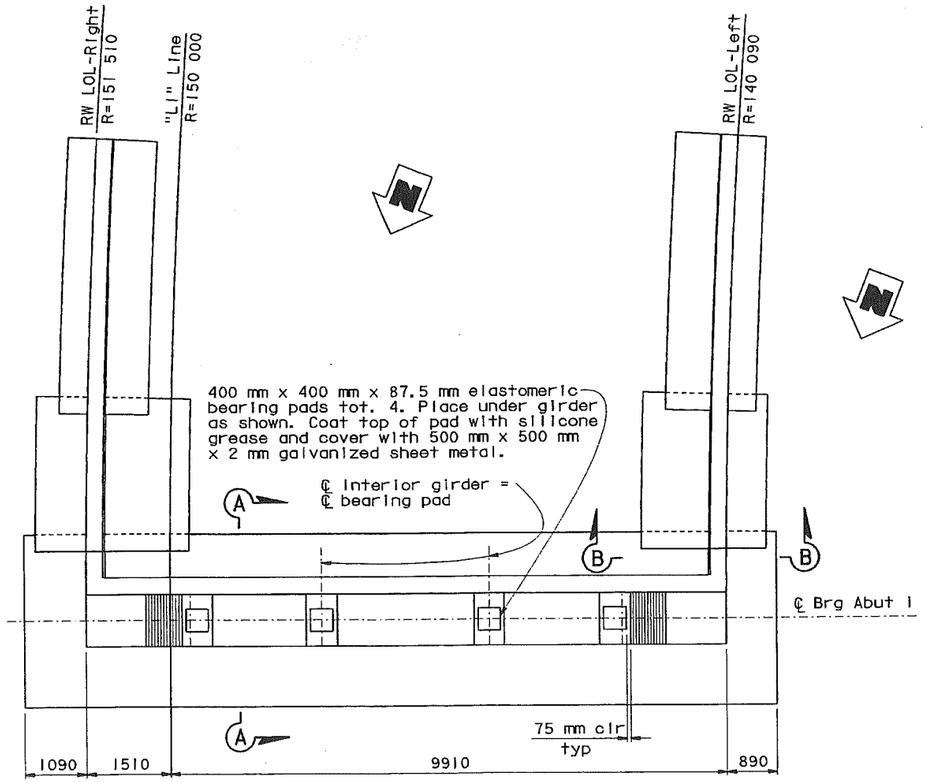

PLAN
1:50

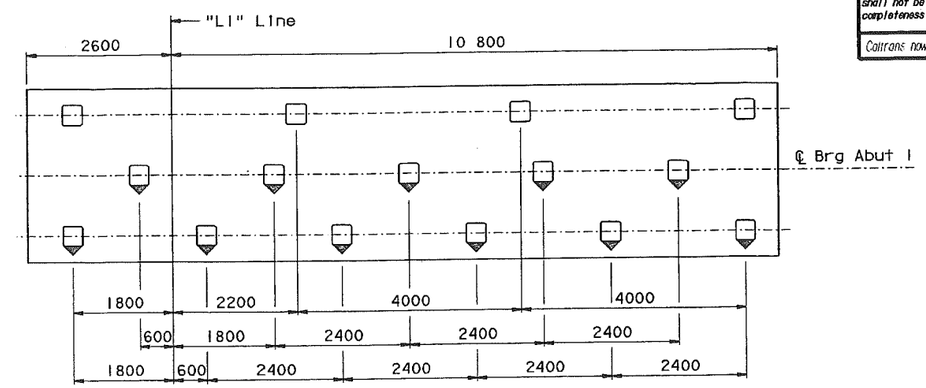

PILE LAYOUT
1:50

Indicates vertical pile

Indicates battered pile

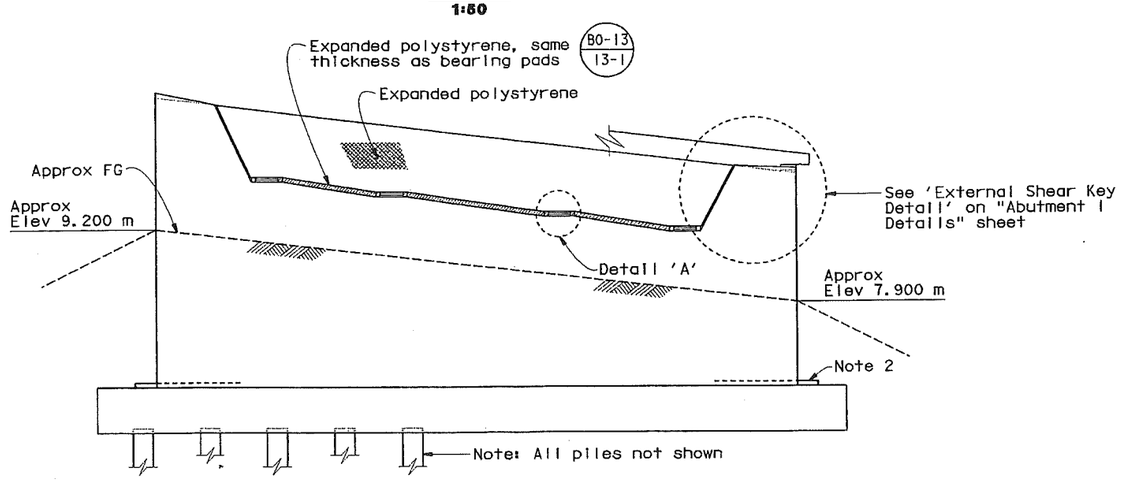

ELEVATION
1:50

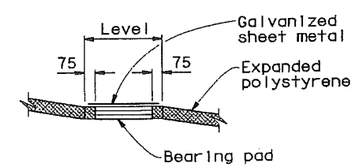

DETAIL A
1:20

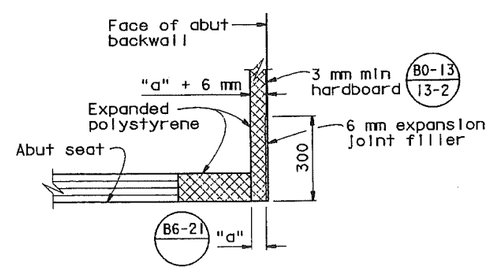

DETAIL B
No scale

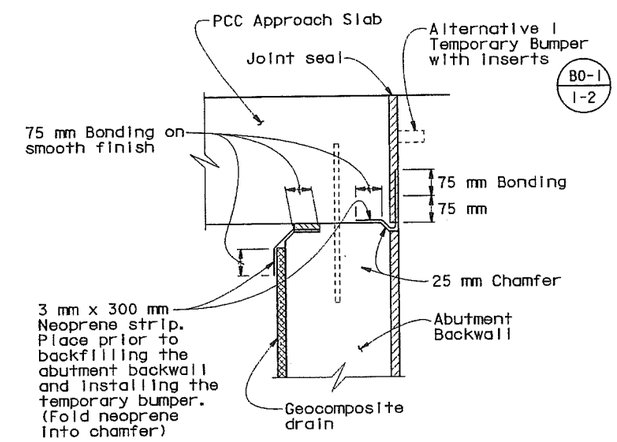

JOINT PROTECTION DETAIL
NO SCALE

Notes:

1. For Sections 'A-A' and 'B-B' and 'Detail B', see "Abutment 1 Details" sheet.
2. See "Structure Approach Drainage Details" sheet.

ALL DIMENSIONS ARE IN MILLIMETERS UNLESS OTHERWISE SHOWN

	BY	CHECKED
DESIGN	Luqi Yang	Tony Huang
DETAILS	K Christopher	Tony Huang
QUANTITIES	Javid Sharifi	Bill Addlespurger

STATE OF CALIFORNIA
DEPARTMENT OF TRANSPORTATION

DIVISION OF STRUCTURES
STRUCTURE DESIGN 12

BRIDGE NO. 37-0582K
KILOMETER POST 16.7

PENITENCIA CREEK BR (ON-RAMP)
ABUTMENT 1 LAYOUT

CU 04
EA 285521

DISREGARD PRINTS BEARING EARLIER REVISION DATES

REVISION DATES (PRELIMINARY STAGE ONLY) 12-21-99 01-13-00 03-07-00 03-27-00 5-18-00 05-26-00

SHEET 5 OF 22

STRUCTURES DESIGN DETAIL SHEET (METRIC) (REV. 3/1/99)

ORIGINAL SCALE IN MILLIMETERS FOR REDUCED PLANS 0 10 20 30 40 50 60 70 80 90 100

FILE => cdabt01.dgn

USERNAME => trclew DATE PLOTTED => 21-MAR-2001 TIME PLOTTED => 10:39

DIST	COUNTY	ROUTE	KILOMETER POST TOTAL PROJECT	SHEET No	TOTAL SHEETS
04	SCl, Ala	880	15.3/16.9, R0.0/R0.7	442	495

Caltrans Metric

Lugi Yang
REGISTERED CIVIL ENGINEER

3-5-01
PLANS APPROVAL DATE

REGISTERED PROFESSIONAL ENGINEER — Lugi Yang, No. 049908, Exp. 09-30-04, CIVIL, STATE OF CALIFORNIA

The State of California or its officers or agents shall not be responsible for the accuracy or completeness of electronic copies of this plan sheet.

Caltrans now has a web site! To get to the web site, go to: http://www.dot.ca.gov

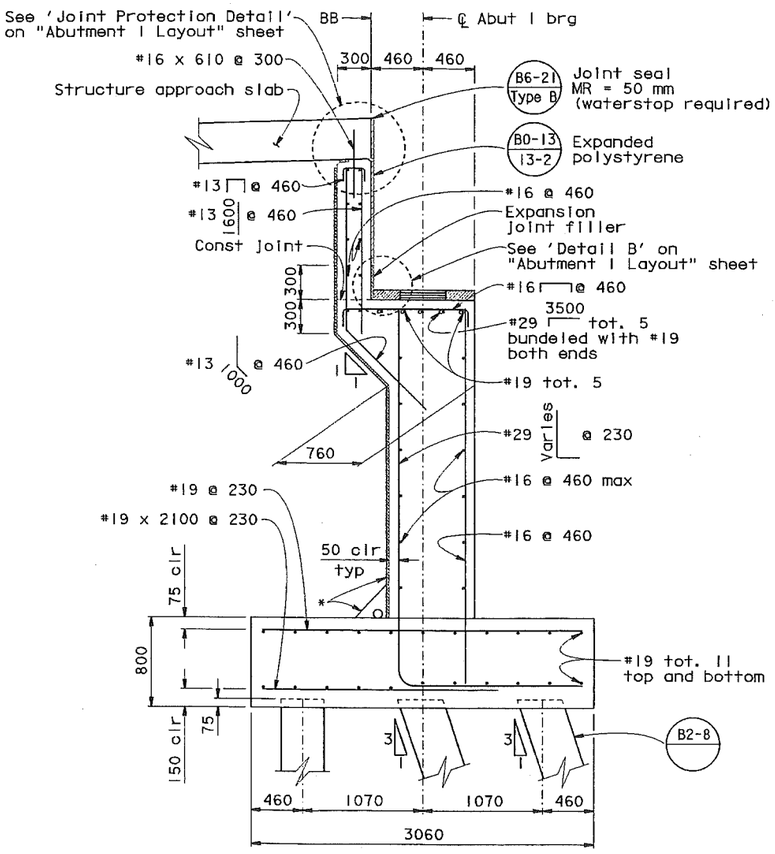

SECTION A-A
1:25

* Geocomposite drain, see "Structure Approach Drainage Details" sheet.

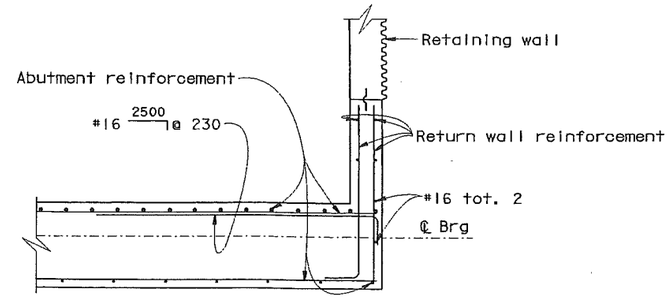

SECTION D-D
1:25

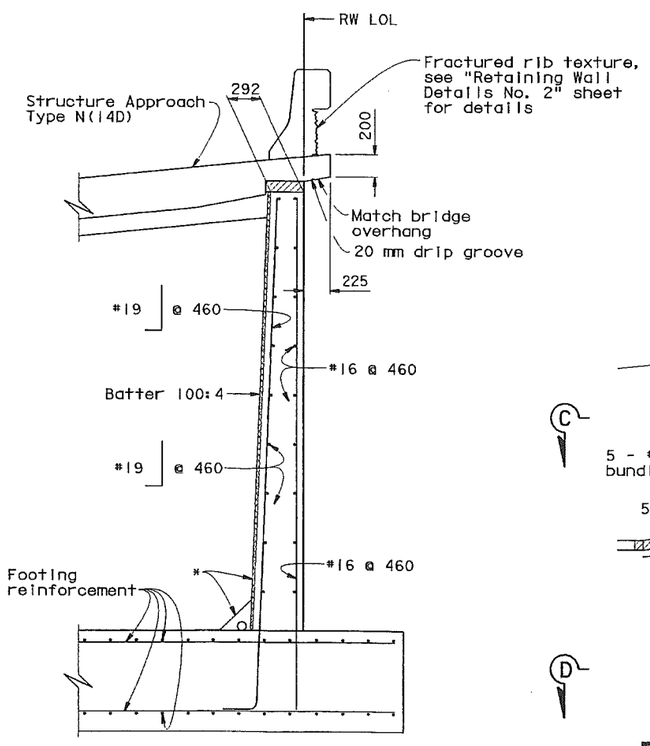

SECTION B-B
1:25

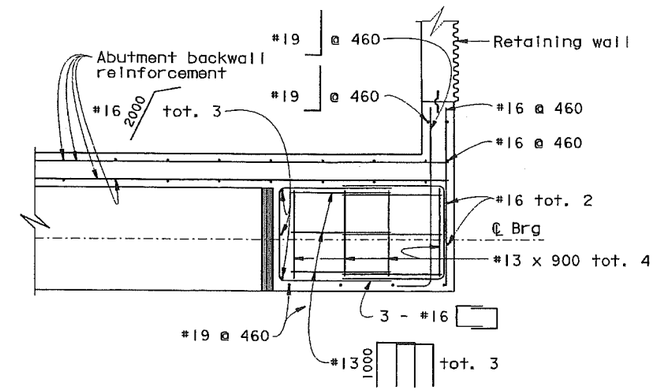

SECTION C-C
1:25

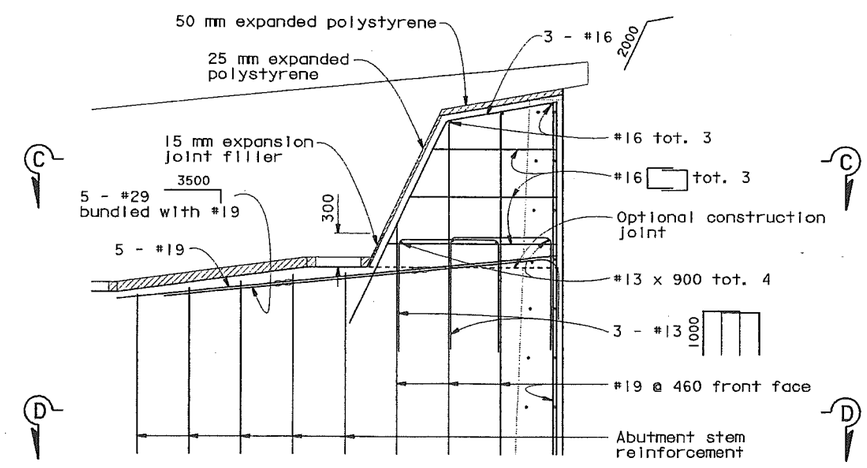

EXTERNAL SHEAR KEY DETAIL
1:25

Note: Right exterior shear key shown, left shear key simmilar.

ALL DIMENSIONS ARE IN MILLIMETERS UNLESS OTHERWISE SHOWN

	BY	CHECKED
DESIGN	Luqi Yang	Tony Huang
DETAILS	K Christopher	Tony Huang
QUANTITIES	Javid Sharifi	Bill Addlespurger

STATE OF CALIFORNIA
DEPARTMENT OF TRANSPORTATION

DIVISION OF STRUCTURES
STRUCTURE DESIGN 12

BRIDGE NO. 37-0582K
KILOMETER POST 16.7

PENITENCIA CREEK BR (ON-RAMP)
ABUTMENT 1 DETAILS

STRUCTURES DESIGN DETAIL SHEET (METRIC) (REV. 3/1/99)

ORIGINAL SCALE IN MILLIMETERS FOR REDUCED PLANS 0 10 20 30 40 50 60 70 80 90 100

CU 04
EA 285521

DISREGARD PRINTS BEARING EARLIER REVISION DATES

REVISION DATES (PRELIMINARY STAGE ONLY): 12-27-99 01-13-00 01-27-00 02-07-00 03-09-00 03-27-00 05-10-00 09-01-00

SHEET 6 OF 22

FILE => cdabt02.dgn

USERNAME => pw DATE PLOTTED => 21-MAR-2001 TIME PLOTTED => 10:39

DIST	COUNTY	ROUTE	KILOMETER POST TOTAL PROJECT	SHEET No	TOTAL SHEETS
04	SCl, Ala	880	15.3/16.9, R0.0/R0.7	443	495

REGISTERED CIVIL ENGINEER

3-5-01
PLANS APPROVAL DATE

REGISTERED PROFESSIONAL ENGINEER Lugi Yang No. 109908 Exp. 09-30-04 CIVIL STATE OF CALIFORNIA

The State of California or its officers or agents shall not be responsible for the accuracy or completeness of electronic copies of this plan sheet.

Caltrans now has a web site! To get to the web site, go to: http://www.dot.ca.gov

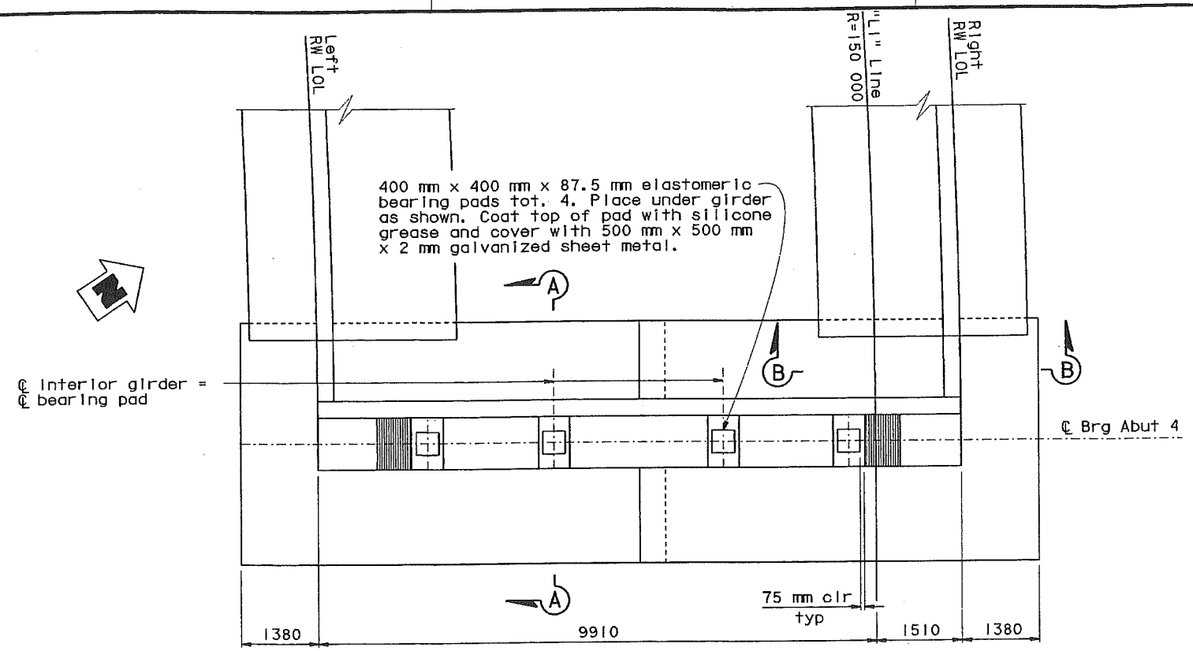

PLAN
1:50

Notes:

1. For Sections 'A-A' and 'B-B', see "Abutment 4 Details" sheet.
2. See "Structure Approach Drainage Details" sheet.
3. For 'Detail A', see "Abutment 1 Layout" sheet.

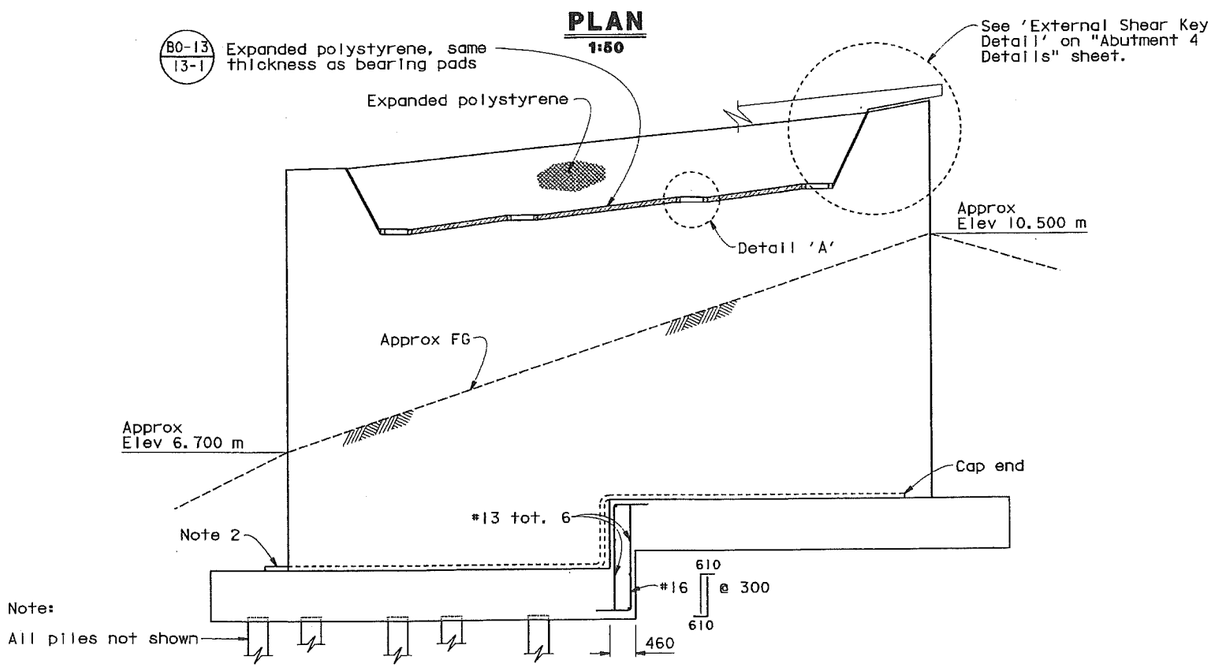

ELEVATION
1:50

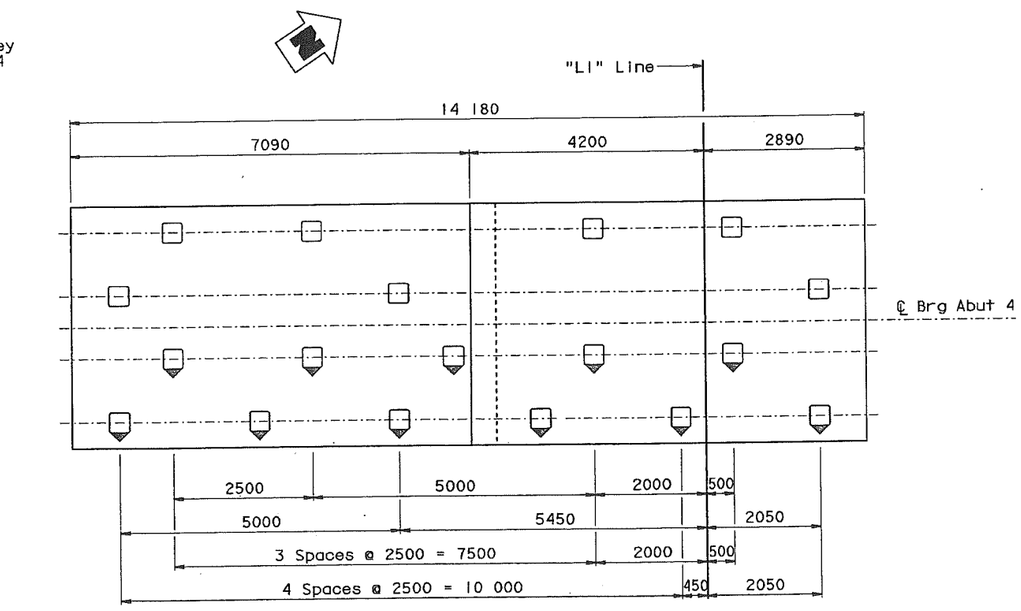

Indicates vertical pile
Indicates battered pile

PILE LAYOUT
1:50

ALL DIMENSIONS ARE IN MILLIMETERS UNLESS OTHERWISE SHOWN

DESIGN	BY Luqi Yang	CHECKED Tony Huang	
DETAILS	BY K Christopher	CHECKED Tony Huang	
QUANTITIES	BY Javid Sharifi	CHECKED Bill Addlespurger	

STATE OF CALIFORNIA
DEPARTMENT OF TRANSPORTATION

DIVISION OF STRUCTURES
STRUCTURE DESIGN 12

BRIDGE NO. 37-0582K
KILOMETER POST 16.7

PENITENCIA CREEK BR (ON-RANMP)
ABUTMENT 4 LAYOUT

CU 04
EA 285521

DISREGARD PRINTS BEARING EARLIER REVISION DATES

REVISION DATES (PRELIMINARY) STAGE ONLY: 12-27-99 01-13-00 03-28-00 03-27-00 05-10-00

SHEET 7 OF 22

STRUCTURES DESIGN DETAIL SHEET (METRIC) (REV. 3/1/99)

ORIGINAL SCALE IN MILLIMETERS FOR REDUCED PLANS 0 10 20 30 40 50 60 70 80 90 100

FILE => cdabt03.dgn

USERNAME => tfc-lbw DATE PLOTTED => 21-MAR-2001 TIME PLOTTED => 10:39

DIST	COUNTY	ROUTE	KILOMETER POST TOTAL PROJECT	SHEET No	TOTAL SHEETS
04	SCl, Ala	880	15.3/16.9 R0.0/R0.7	444	495

Caltrans Metric

REGISTERED CIVIL ENGINEER

3-5-01
PLANS APPROVAL DATE

REGISTERED PROFESSIONAL ENGINEER — Luqi Yang — No. 049908 — Exp. 09-30-04 — CIVIL — STATE OF CALIFORNIA

The State of California or its officers or agents shall not be responsible for the accuracy or completeness of electronic copies of this plan sheet.

Caltrans now has a web site! To get to the web site, go to: http://www.dot.ca.gov

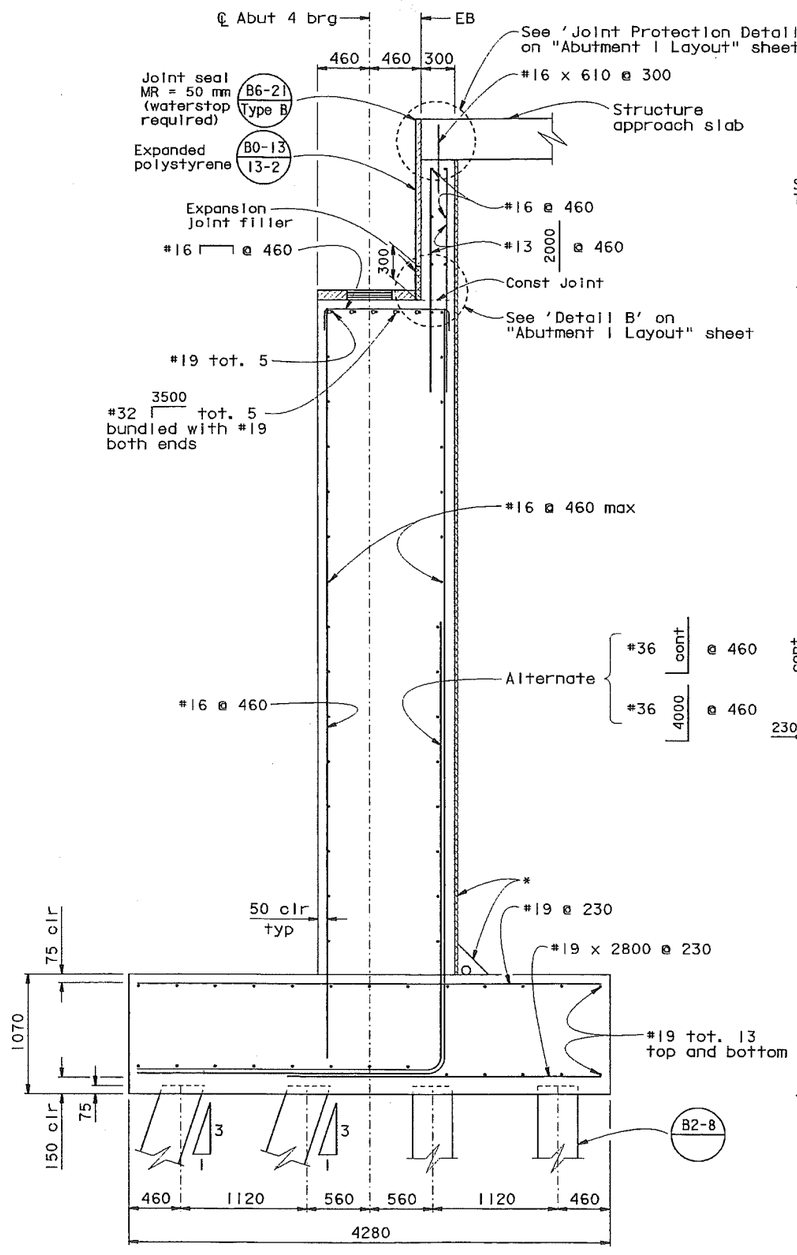

SECTION A-A
1:25

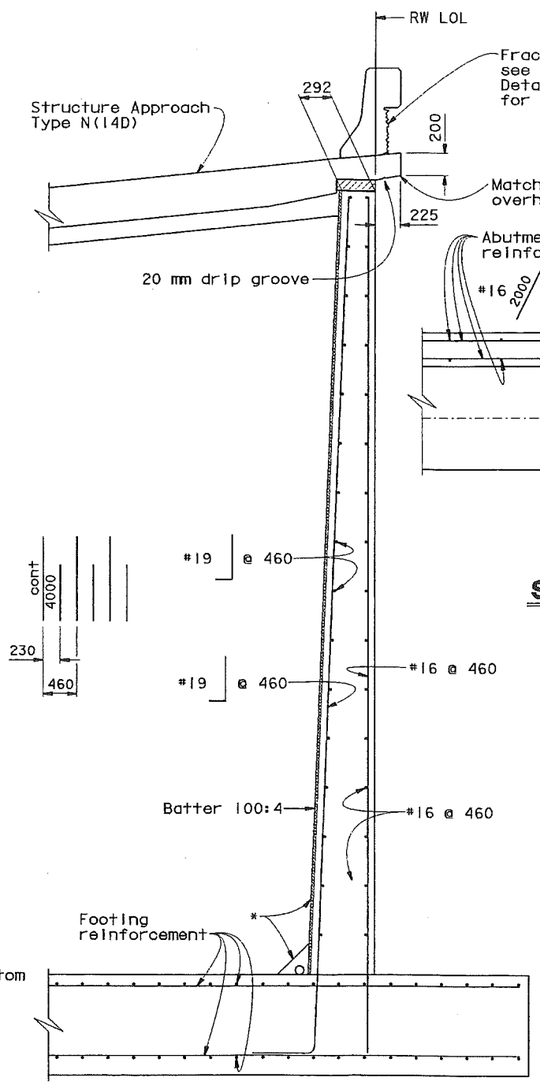

SECTION B-B
1:25

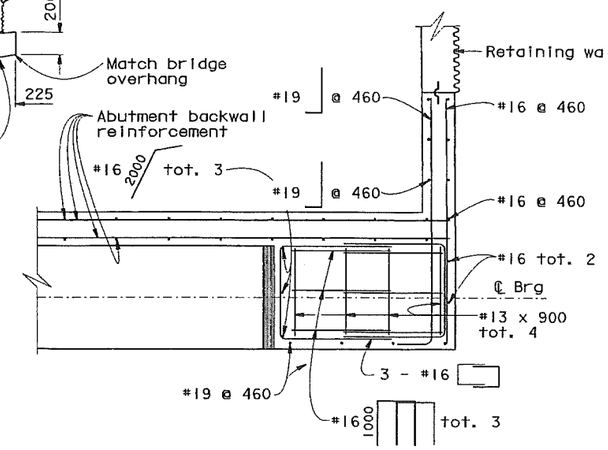

SECTION C-C
1:25

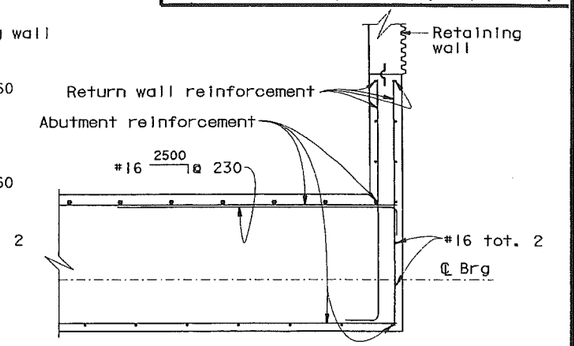

SECTION D-D
1:25

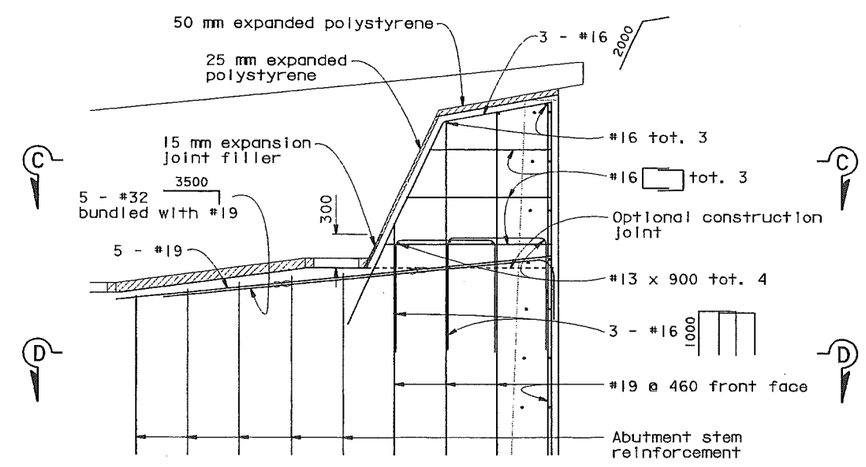

EXTERNAL SHEAR KEY DETAIL
1:25

Note: Right exterior shear key shown, left shear key similar.

* Geocomposite drain, see "Structure Approach Drainage Details" sheet.

ALL DIMENSIONS ARE IN MILLIMETERS UNLESS OTHERWISE SHOWN

	BY	CHECKED
DESIGN	Luqi Yang	Tony Huang
DETAILS	K Christopher	Tony Huang
QUANTITIES	David Sharifi	Bill Addiespurger

STATE OF CALIFORNIA
DEPARTMENT OF TRANSPORTATION

DIVISION OF STRUCTURES
STRUCTURE DESIGN 12

BRIDGE NO. 37-0582K
KILOMETER POST 16.7

PENITENCIA CREEK BR (ON-RAMP)
ABUTMENT 4 DETAILS

STRUCTURES DESIGN DETAIL SHEET (METRIC) (REV. 3/1/99)

ORIGINAL SCALE IN MILLIMETERS FOR REDUCED PLANS 0 10 20 30 40 50 60 70 80 90 100

CU 04
EA 285521

DISREGARD PRINTS BEARING EARLIER REVISION DATES

REVISION DATES (PRELIMINARY STAGE ONLY): 12-27-99 01-13-00 03-09-00 03-28-00 05-18-00 09-05-00 09-07-00

SHEET 8 OF 22

FILE => cdabt04.dgn

USERNAME DATE PLOTTED => 21-MAR-2001 TIME PLOTTED => 10:39

DIST	COUNTY	ROUTE	KILOMETER POST TOTAL PROJECT	SHEET No	TOTAL SHEETS
04	SCl, Alg	880	15.3/16.9, R0.0/R0.7	445	495

Caltrans Metric

REGISTERED CIVIL ENGINEER

3-5-01
PLANS APPROVAL DATE

REGISTERED PROFESSIONAL ENGINEER Luqi Yang No. 049908 Exp. 09-30-04 CIVIL STATE OF CALIFORNIA

The State of California or its officers or agents shall not be responsible for the accuracy or completeness of electronic copies of this plan sheet.

Caltrans now has a web site! To get to the web site, go to: http://www.dot.ca.gov

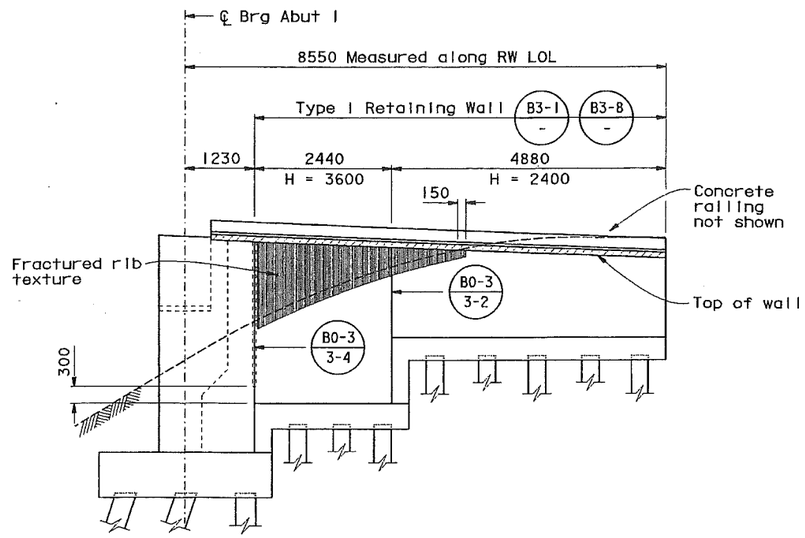

ELEVATION

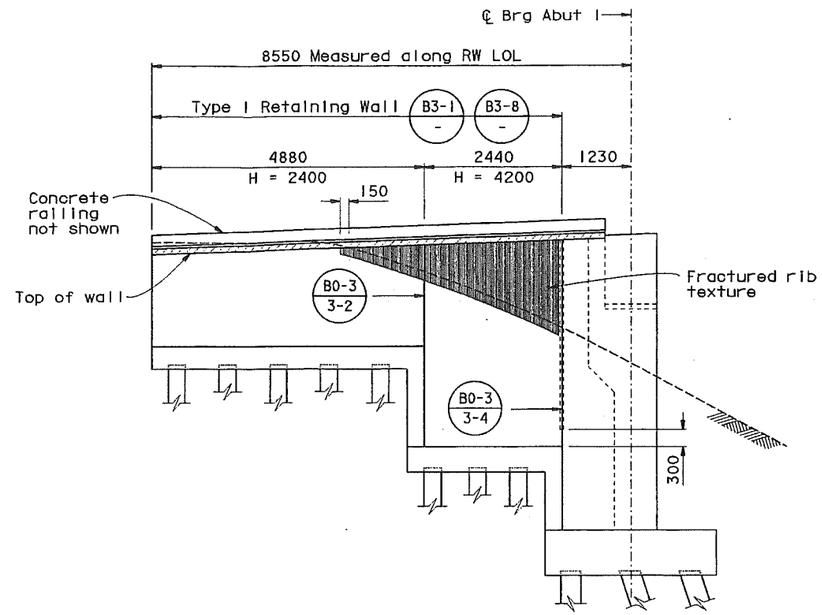

ELEVATION

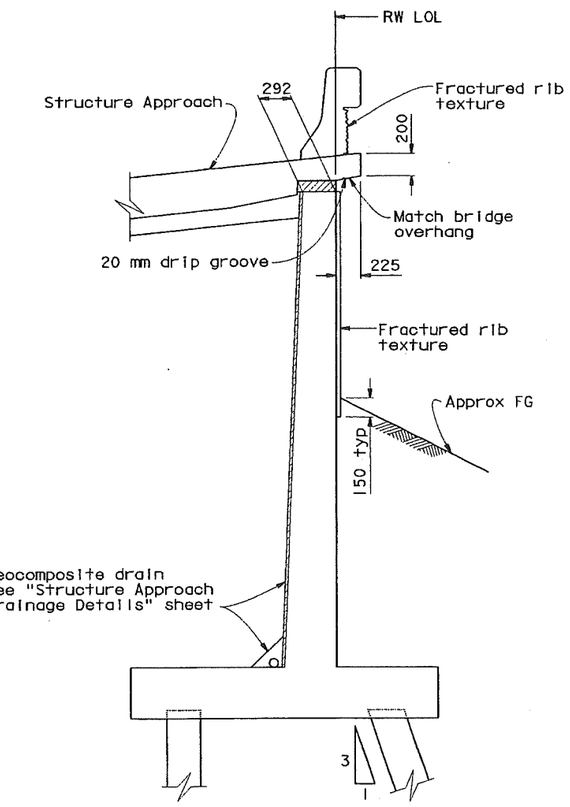

TYPICAL SECTION
1:25

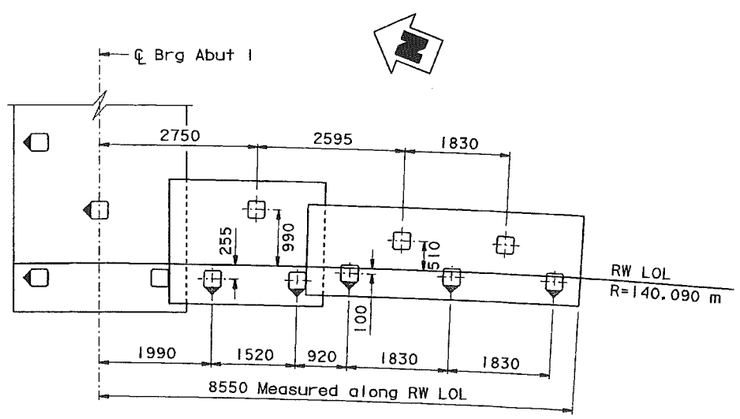

PLAN

ABUTMENT 1 LEFT
1:50

- Indicates vertical pile
- Indicates battered pile
- Remove all polystyrene

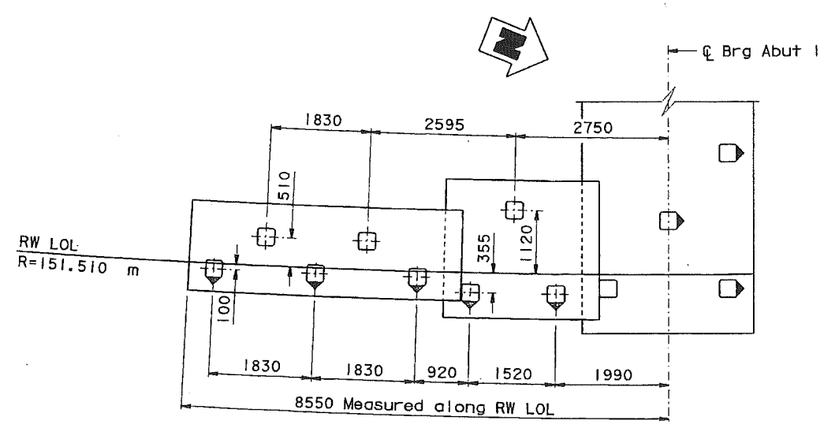

PLAN

ABUTMENT 1 RIGHT
1:50

ALL DIMENSIONS ARE IN MILLIMETERS UNLESS OTHERWISE SHOWN

DESIGN	BY Luqi Yang	CHECKED Tony Huang	
DETAILS	BY K Christopher	CHECKED Tony Huang	
QUANTITIES	BY Javid Sharifi	CHECKED Bill Addlespurger	

STATE OF CALIFORNIA
DEPARTMENT OF TRANSPORTATION

DIVISION OF STRUCTURES
STRUCTURE DESIGN 12

BRIDGE NO. 37-0582K
KILOMETER POST 16.7

PENITENCIA CREEK BR (ON-RAMP)
RETAINING WALL DETAILS NO. 1

STRUCTURES DESIGN DETAIL SHEET (METRIC) (REV. 3/1/99)

ORIGINAL SCALE IN MILLIMETERS FOR REDUCED PLANS 0 10 20 30 40 50 60 70 80 90 100

CU 04
EA 285521

DISREGARD PRINTS BEARING EARLIER REVISION DATES

REVISION DATES (PRELIMINARY STAGE ONLY) 12-20-99 12-27-99 01-27-00 03-20-00 03-09-00 03-28-00 05-10-00 06-07-00 09-08-00

SHEET 9 OF 22

FILE => cdrtw01.dgn

USERNAME => trclew DATE PLOTTED => 21-MAR-2001 TIME PLOTTED => 10:40

DIST	COUNTY	ROUTE	KILOMETER POST TOTAL PROJECT	SHEET No	TOTAL SHEETS
04	SCl, Ala	880	15.3/16.9, R0.0/R0.7	446	495

Caltrans Metric

Luqi Yang
REGISTERED CIVIL ENGINEER

3-5-01
PLANS APPROVAL DATE

REGISTERED PROFESSIONAL ENGINEER Luqi Yang No. 049908 Exp. 09-30-04 CIVIL STATE OF CALIFORNIA

The State of California or its officers or agents shall not be responsible for the accuracy or completeness of electronic copies of this plan sheet.

Caltrans now has a web site! To get to the web site, go to: http://www.dot.ca.gov

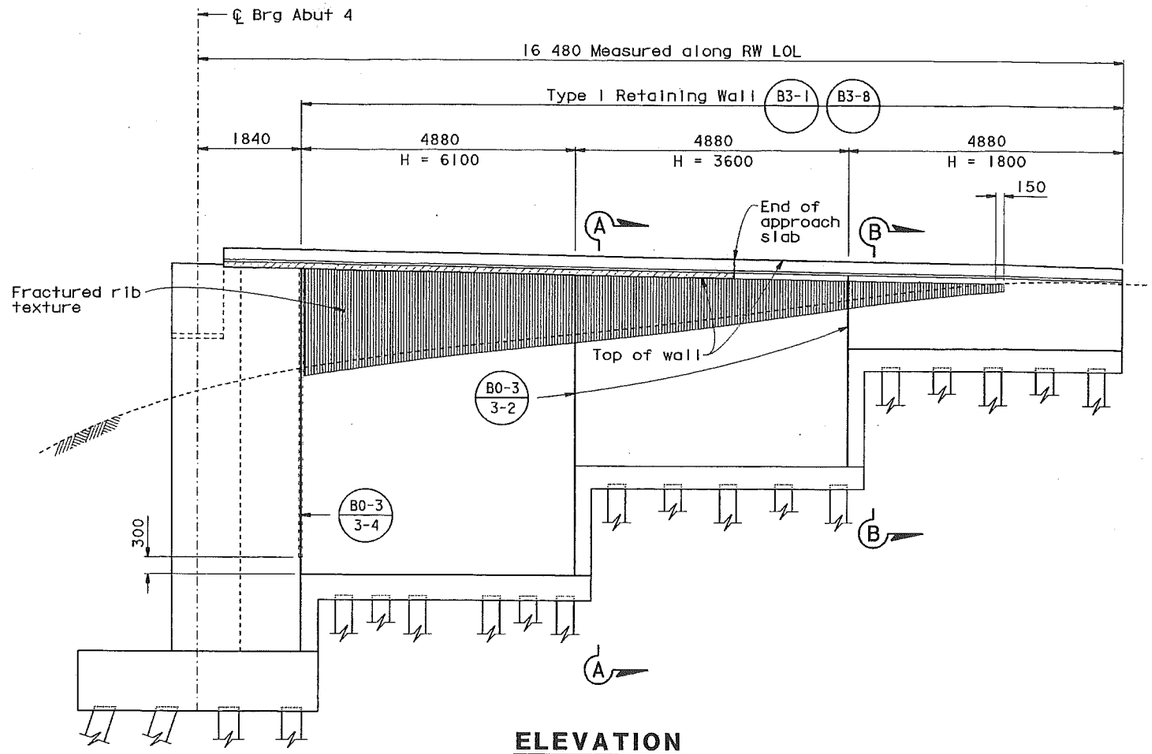

ELEVATION

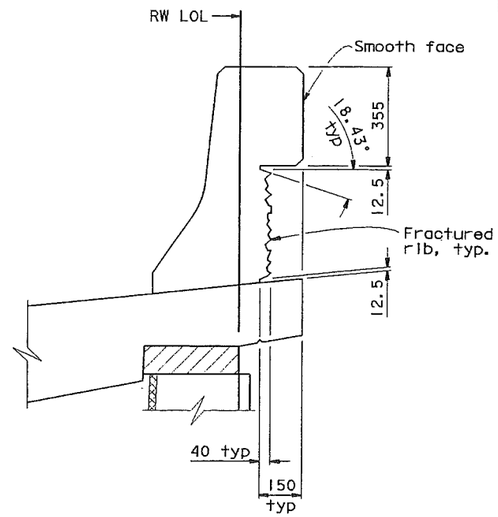

CONCRETE BARRIER DETAIL

1:50

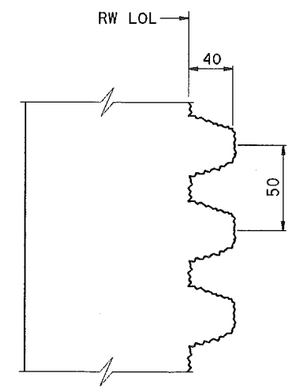

TYPICAL AESTHETIC TREATMENT (FRACTURED RIB)

No Scale

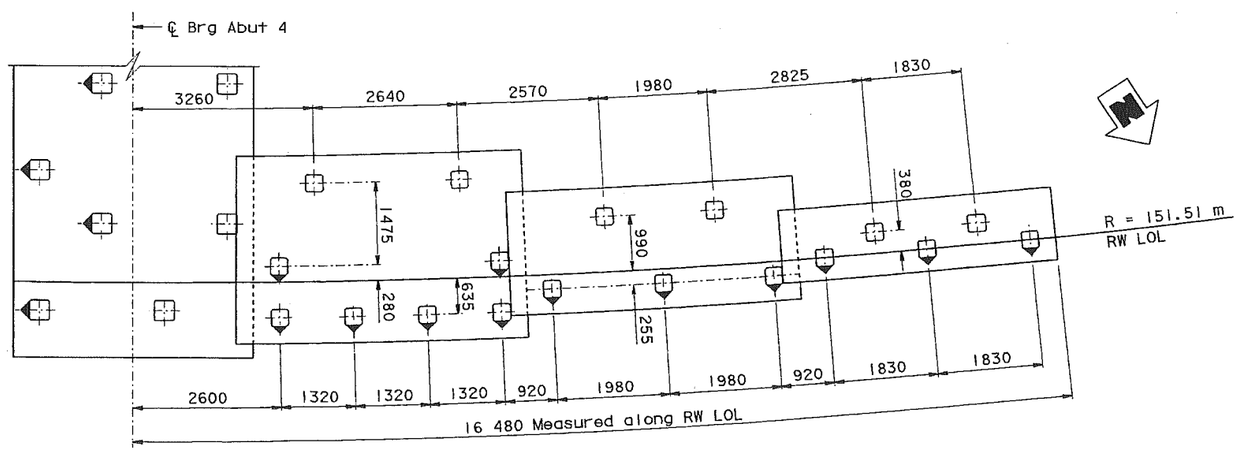

PLAN

ABUTMENT 4 RIGHT

1:50

- Indicates vertical pile
- Indicates battered pile
- Remove all polystyrene

Note:

For 'Section A-A' and 'Section B-B', see "Retaining Wall Details No. 4" sheet.

ALL DIMENSIONS ARE IN MILLIMETERS UNLESS OTHERWISE SHOWN

	BY	CHECKED
DESIGN	Luqi Yang	Tony Huang
DETAILS	K Christopher	Tony Huang
QUANTITIES	Javid Sharifi	Bill Addlespuger

STATE OF CALIFORNIA DEPARTMENT OF TRANSPORTATION

DIVISION OF STRUCTURES STRUCTURE DESIGN 12

BRIDGE NO. 37-0582K
KILOMETER POST 16.7

PENITENCIA CREEK BR (ON-RAMP)
RETAINING WALL DETAILS NO. 2

CU 04
EA 285521

STRUCTURES DESIGN DETAIL SHEET (METRIC) (REV. 3/1/99)

ORIGINAL SCALE IN MILLIMETERS FOR REDUCED PLANS 0 10 20 30 40 50 60 70 80 90 100

DISREGARD PRINTS BEARING EARLIER REVISION DATES

REVISION DATES (PRELIMINARY STAGE ONLY) 12-22-99 12-21-99 01-18-00 03-07-00 03-28-00 05-18-00 06-01-00

SHEET 10 OF 22

FILE => cdrtw02.dgn

USERNAME => tonlew DATE PLOTTED => 21-MAR-2001 TIME PLOTTED => 10:40

DIST	COUNTY	ROUTE	KILOMETER POST TOTAL PROJECT	SHEET No	TOTAL SHEETS
04	SCl, Ala	880	15.3/16.9, R0.0/R0.7	447	495

REGISTERED CIVIL ENGINEER

3-5-01
PLANS APPROVAL DATE

REGISTERED PROFESSIONAL ENGINEER Lugi Yang No. 049908 Exp. 09-30-04 CIVIL STATE OF CALIFORNIA

The State of California or its officers or agents shall not be responsible for the accuracy or completeness of electronic copies of this plan sheet.

Cal-Trans now has a web site! To get to the web site, go to: http://www.dot.ca.gov

Caltrans Metric

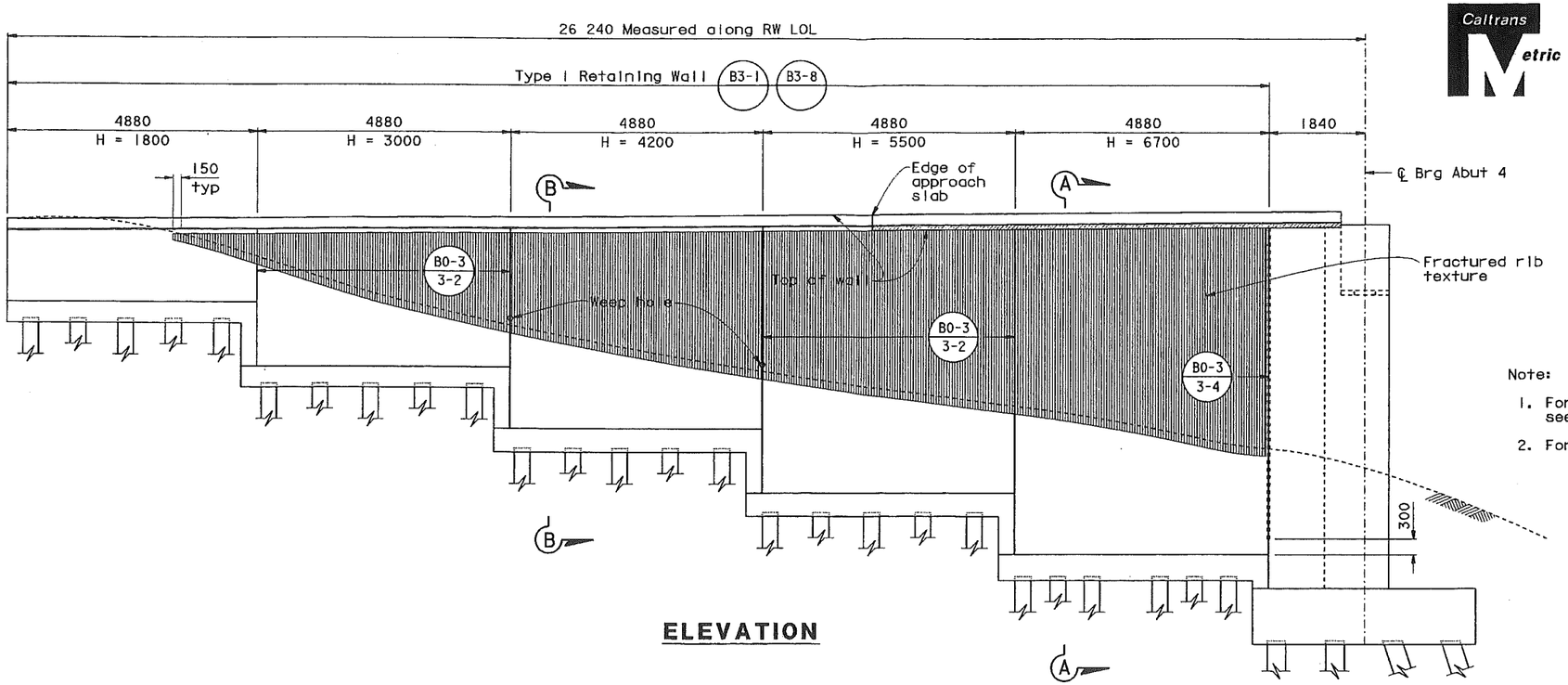

ELEVATION

Note:

1. For 'Section A-A' and 'Section B-B', see "Retaining Wall Details No. 4" sheet.
2. For RW LOL, see "Foundation Plan" sheet.

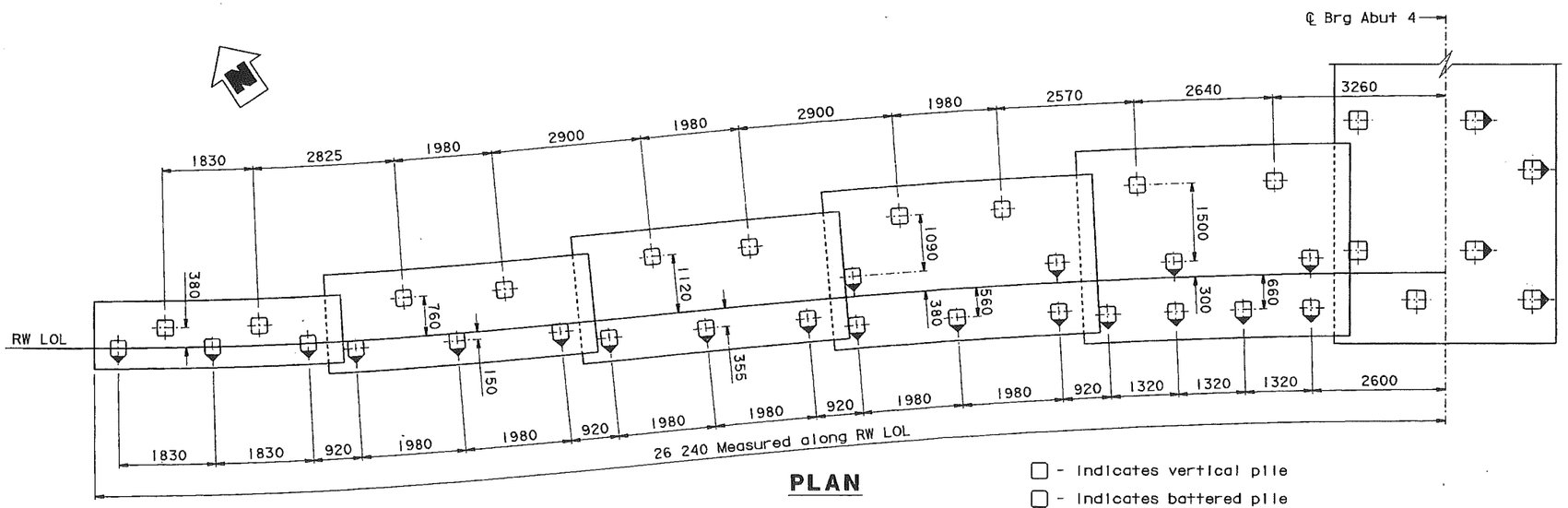

PLAN

ABUTMENT 4 LEFT

1:50

- Indicates vertical pile
- Indicates battered pile
- Remove all polystyrene

ALL DIMENSIONS ARE IN MILLIMETERS UNLESS OTHERWISE SHOWN

	BY	CHECKED
DESIGN	Lugi Yang	Tony Huang
DETAILS	K Christopher	Tony Huang
QUANTITIES	Javid Sharifi	Bill Adlespurger

STATE OF CALIFORNIA DEPARTMENT OF TRANSPORTATION

DIVISION OF STRUCTURES STRUCTURE DESIGN 12

BRIDGE NO. 37-0582K
KILOMETER POST 16.7

PENITENCIA CREEK BR (ON-RAMP)
RETAINING WALL DETAILS NO. 3

STRUCTURES DESIGN DETAIL SHEET (METRIC) (REV. 3/1/99)

ORIGINAL SCALE IN MILLIMETERS FOR REDUCED PLANS 0 10 20 30 40 50 60 70 80 90 100

CU 04
EA 285521

FILE => cdrtw03.dgn

DISREGARD PRINTS BEARING EARLIER REVISION DATES

REVISION DATES (PRELIMINARY STAGE ONLY) 12-27-99 01-28-00 03-07-00 03-28-00 05-18-00 09-11-00

SHEET 11 OF 22

USERNAME => trolew DATE PLOTTED => 21-MAR-2001 TIME PLOTTED => 10:40

DIST	COUNTY	ROUTE	KILOMETER POST TOTAL PROJECT	SHEET No	TOTAL SHEETS
04	SCl, Ala	880	15.3/16.9, R0.0/R0.7	448	495

Caltrans Metric

Luqi Yang
REGISTERED CIVIL ENGINEER

3-5-01
PLANS APPROVAL DATE

REGISTERED PROFESSIONAL ENGINEER Luqi Yong No. 049908 Exp. 09-30-04 CIVIL STATE OF CALIFORNIA

The State of California or its officers or agents shall not be responsible for the accuracy or completeness of electronic copies of this plan sheet.

Cal-Trans now has a web site! To get to the web site, go to: http://www.dot.ca.gov

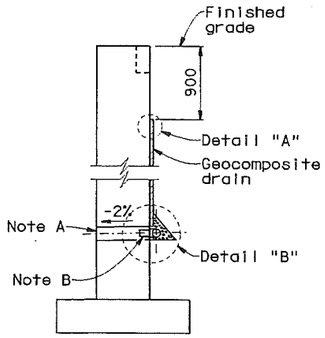

WALL SECTION

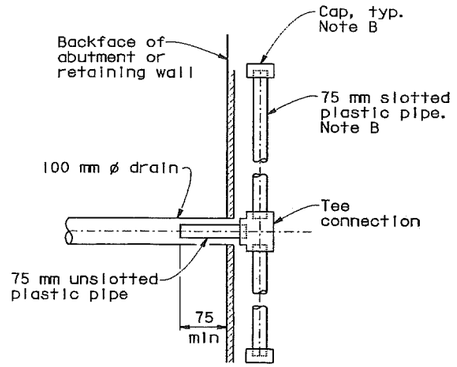

SECTION C-C

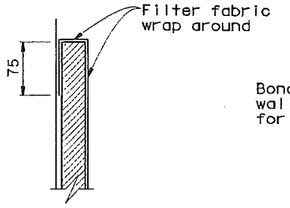

DETAIL "A"

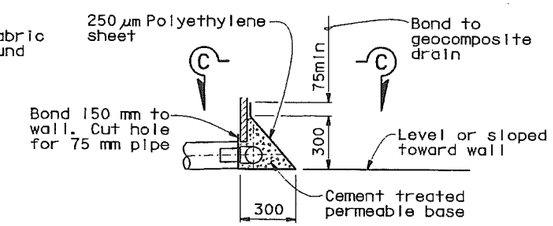

DETAIL "B"

WEEP HOLE AND GEOCOMPOSITE DRAIN

Notes:

A. Place 100 mm ø drains as shown on retaining wall elevation view. Exposed wall drains shall be located 75± mm above finished grade.

B. Geocomposite drain, cement treated permeable base, and 75 mm ø slotted plastic pipe continuous behind retaining wall or abutment. Cap ends of pipe. Provide "Tee" connection at each 100 mm ø drain.

C. Connect the low end of plastic pipe to the main outlet pipe as applicable.

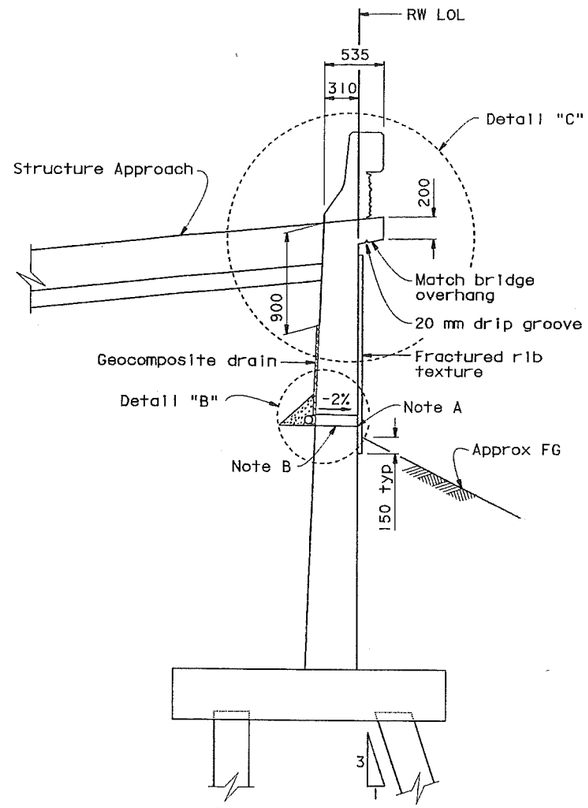

SECTION B-B
1:25

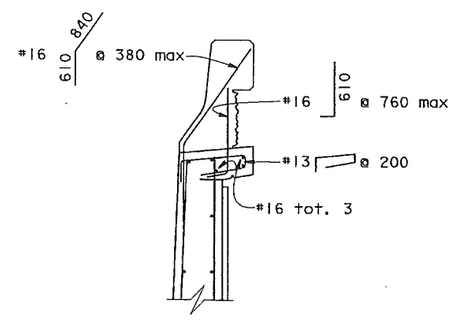

DETAIL "C"
1:20

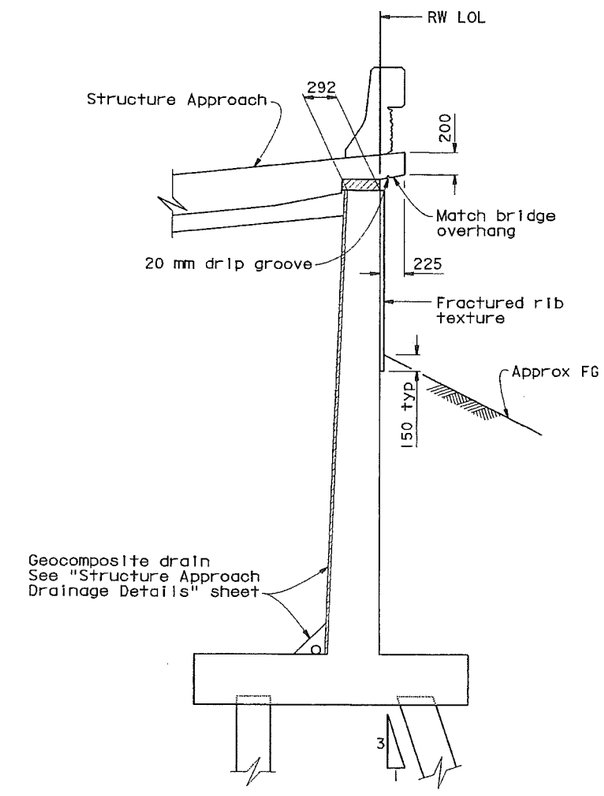

SECTION A-A
1:25

For details not shown, see B11-53 and B3-1

▨ - Remove all polystyrene

ALL DIMENSIONS ARE IN MILLIMETERS UNLESS OTHERWISE SHOWN

	BY	CHECKED
DESIGN	Luqi Yang	Tony Huang
DETAILS	K Christopher	Tony Huang
QUANTITIES	Javid Sharifi	Bill Addlespurger

STATE OF CALIFORNIA
DEPARTMENT OF TRANSPORTATION

DIVISION OF STRUCTURES
STRUCTURE DESIGN 12

BRIDGE NO. 37-0582K
KILOMETER POST 16.7

PENITENCIA CREEK BR (ON-RAMP)
RETAINING WALL DETAILS NO. 4

STRUCTURES DESIGN DETAIL SHEET (METRIC) (REV. 3/1/99)

ORIGINAL SCALE IN MILLIMETERS FOR REDUCED PLANS 0 10 20 30 40 50 60 70 80 90 100

CU 04
EA 285521

DISREGARD PRINTS BEARING EARLIER REVISION DATES

REVISION DATES (PRELIMINARY STAGE ONLY): 12-27-99 01-13-00 01-26-00 03-01-00 03-28-00 05-18-00 06-01-00

SHEET 12 OF 22

FILE => cdrtw04.dgn

USERNAME => trclew DATE PLOTTED => 21-MAR-2001 TIME PLOTTED => 10:40

DIST	COUNTY	ROUTE	KILOMETER POST TOTAL PROJECT	SHEET No	TOTAL SHEETS
04	SCl, Ala	880	15.3/16.9, R0.0/R0.7	449	495

Caltrans Metric

Luqi Yang
REGISTERED CIVIL ENGINEER

3-5-01
PLANS APPROVAL DATE

REGISTERED PROFESSIONAL ENGINEER — Luqi Yang, No. 49908, Exp. 09-30-04, CIVIL, STATE OF CALIFORNIA

The State of California or its officers or agents shall not be responsible for the accuracy or completeness of electronic copies of this plan sheet.

Cal-Trans now has a web site! To get to the web site, go to: http://www.dot.ca.gov

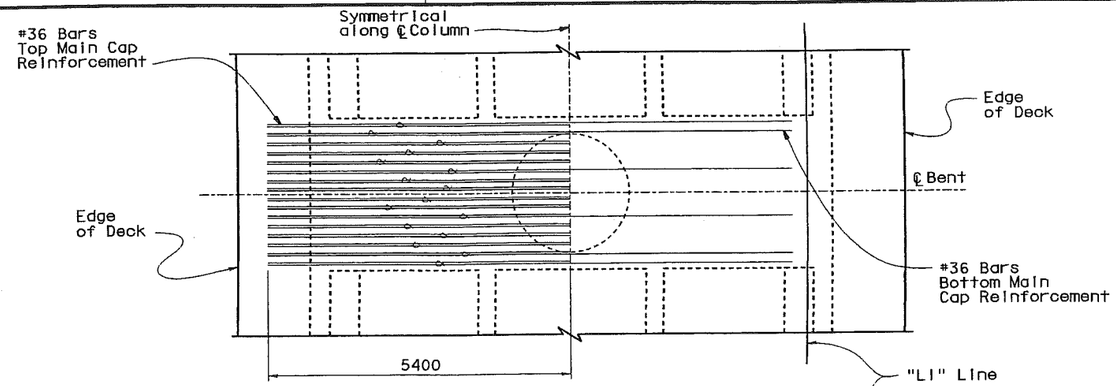

PLAN
1:50

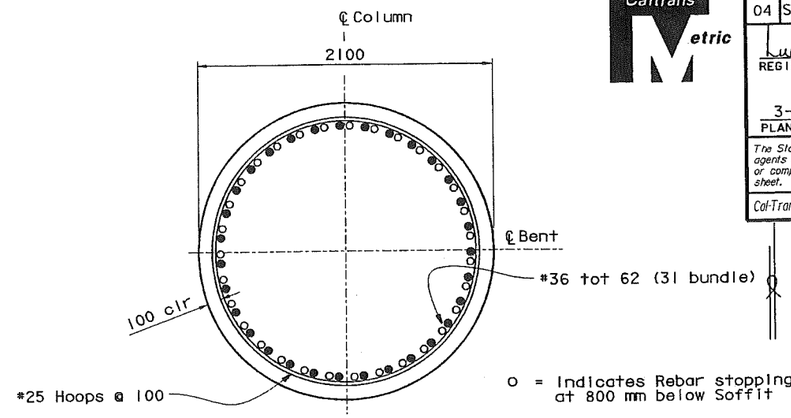

o = Indicates Rebar stopping at 800 mm below Soffit

● = Indicates Rebar extending into Superstructure

SECTION H-H
1:20

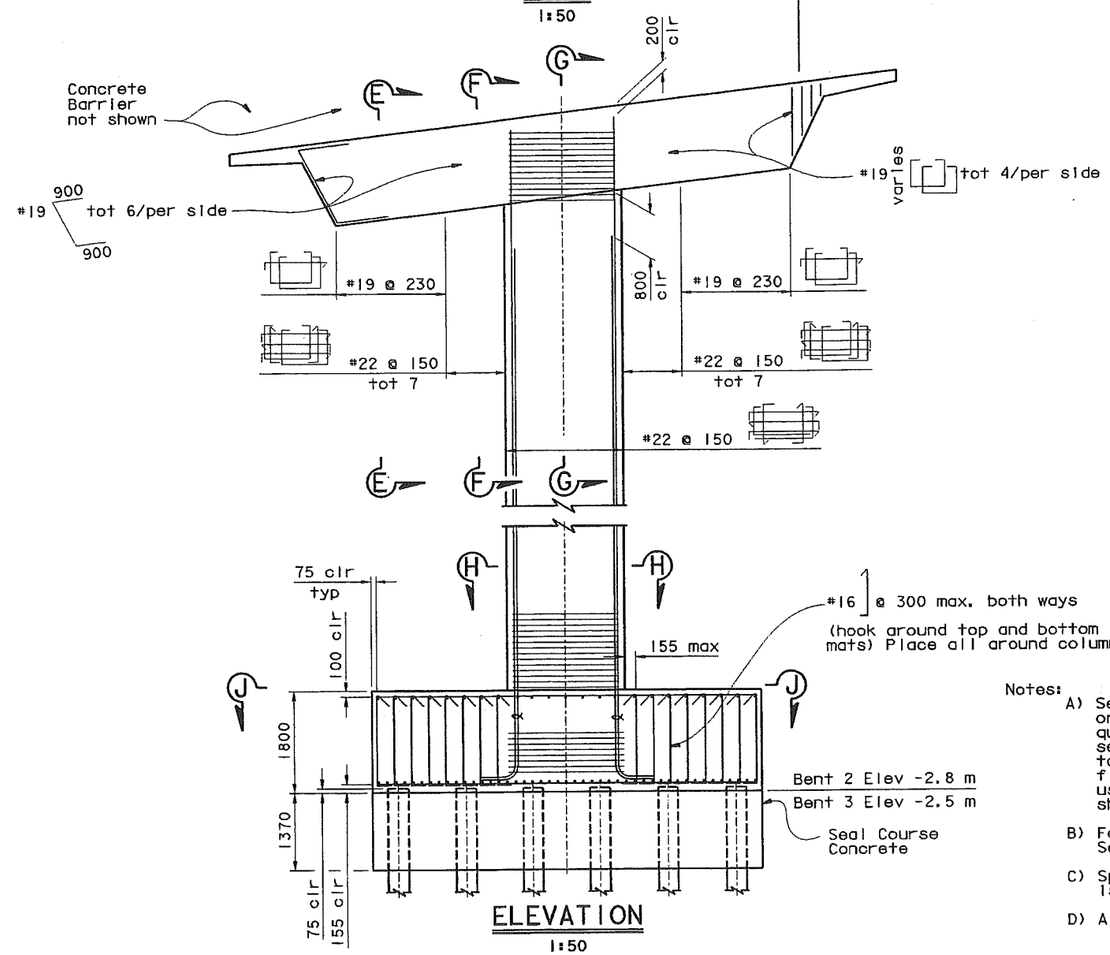

ELEVATION
1:50

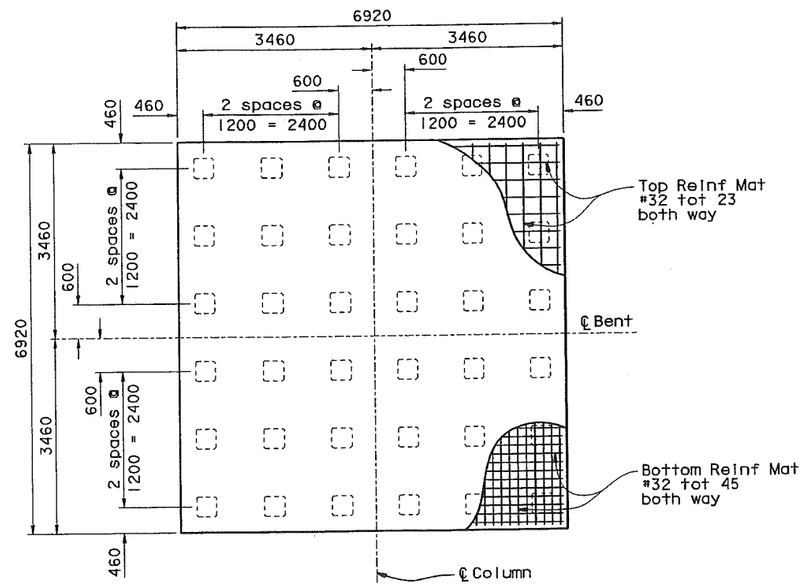

SECTION J-J
1:50

Notes:

A) Seal course to be placed only when ordered by the Engineer. Estimated quantities involved are based on the seal thickness shown. The thickness to be used will be determined in the field by the Engineer. When seal is not used, the bottom of the reinforced footing shall remain at the elevation shown.

B) For "Section E-E", "F-F", and "G-G", See "Bent Details No.2" sheet.

C) Splicing of Main Column Reinforcement is not permitted.

D) All hoops shall be "ultimate" butt spliced.

ALL DIMENSIONS ARE IN MILLIMETERS UNLESS OTHERWISE SHOWN

	BY	CHECKED
DESIGN	Luqi Yang	Tony Huang
DETAILS	Stevy Lee	Tony Huang
QUANTITIES	Javid Sharifi	Bill Addlespurger

STATE OF CALIFORNIA
DEPARTMENT OF TRANSPORTATION

DIVISION OF STRUCTURES
STRUCTURE DESIGN 12

BRIDGE NO. 37-0582K
KILOMETER POST 16.7

PENITENCIA CREEK BR (ON-RAMP)
BENT DETAILS NO. 1

CU 04
EA 285521

DISREGARD PRINTS BEARING EARLIER REVISION DATES

REVISION DATES (PRELIMINARY STAGE ONLY): 05-30-00 05-05-00

SHEET 13 OF 22

STRUCTURES DESIGN DETAIL SHEET (METRIC) (REV. 3/1/99)

ORIGINAL SCALE IN MILLIMETERS FOR REDUCED PLANS 0 10 20 30 40 50 60 70 80 90 100

FILE => cebnt01.dgn

USERNAME => tfrclew DATE PLOTTED => 21-MAR-2001 TIME PLOTTED => 10:40

DIST	COUNTY	ROUTE	KILOMETER POST TOTAL PROJECT	SHEET No	TOTAL SHEETS
04	SCl, Ala	880	15.3/16.9 R0.0/R0.7	450	495

Luqi Yang
REGISTERED CIVIL ENGINEER

3-5-01
PLANS APPROVAL DATE

REGISTERED PROFESSIONAL ENGINEER — Luqi Yang — No. 49908 — Exp. 09-30-04 — CIVIL — STATE OF CALIFORNIA

The State of California or its officers or agents shall not be responsible for the accuracy or completeness of electronic copies of this plan sheet.

Cal-Trans now has a web site! To get to the web site, go to: http://www.dot.ca.gov

Caltrans Metric

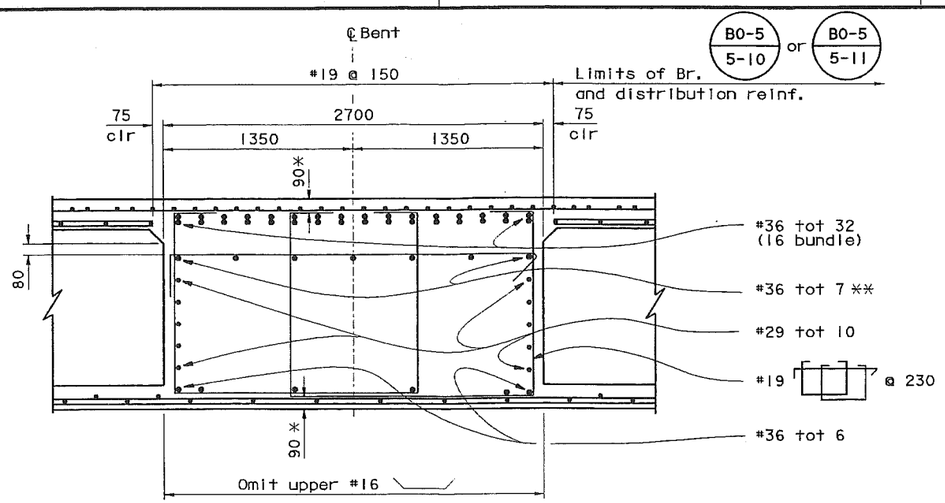

SECTION E-E
1:20

Notes:
* = Clearance to Main Cap Reinforcement
** = Reinforcement may be bent or lowered to clear P/S Ducts.

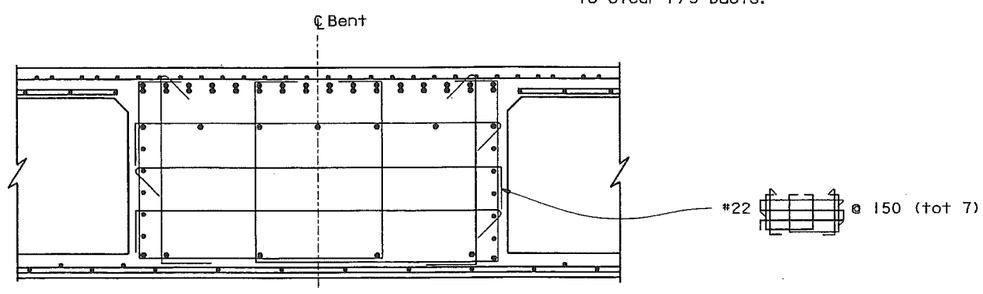

SECTION F-F
1:20

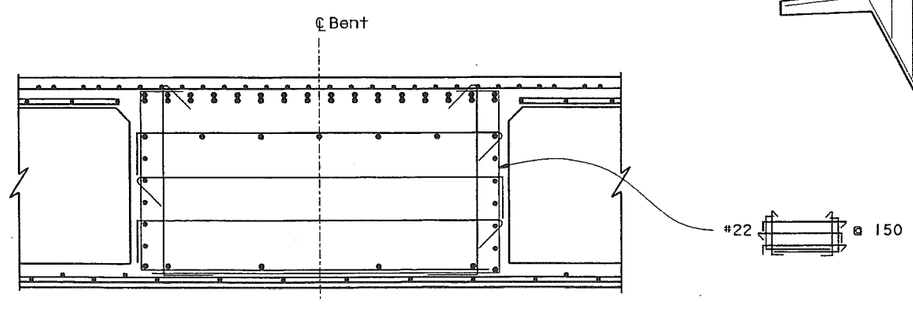

SECTION G-G
1:20

Note:
For notes or details not shown, see "Section E-E"

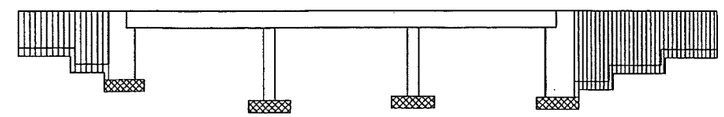

Structural Concrete, Bridge (28 MPa at 28 days)
Structural Concrete, Bridge Footing (28 MPa at 28 days)
Structural Concrete, Retaining Wall (28 MPa at 28 days)

CONCRETE STRENGTH AND TYPE LIMITS
No Scale

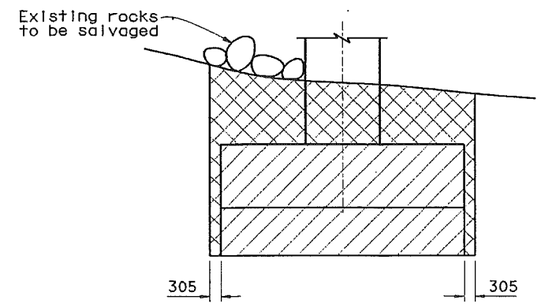

Structure Excavation (Type A)
Structure Backfill

LIMITS OF EXCAVATION AND BACKFILL
No Scale

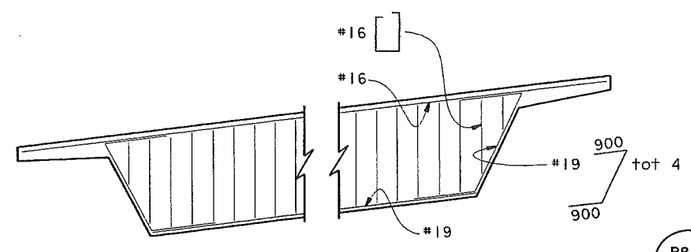

SECTION H-H
1:40

PRESTRESSING NOTES

1860 MPa Low Relaxation Strand:

P_{jack} = 16020 kN

Anchor Set = 10 mm

Total Number of Girders = 4

Distribution of prestress force (Pjack) between girders shall not exceed the ratio of 3:2. Maximum final force variation between girders **shall not exceed 3225 kN.**

Concrete: f'_c = 28 MPa @ 28 days

f'_{ci} = 25 MPa @ time of stressing

Contractor shall submit elongation calculations based on initial stress at

⊠ = 0.792 times jacking stress.

One left end stressing shall be performed from the Abut 4 end.

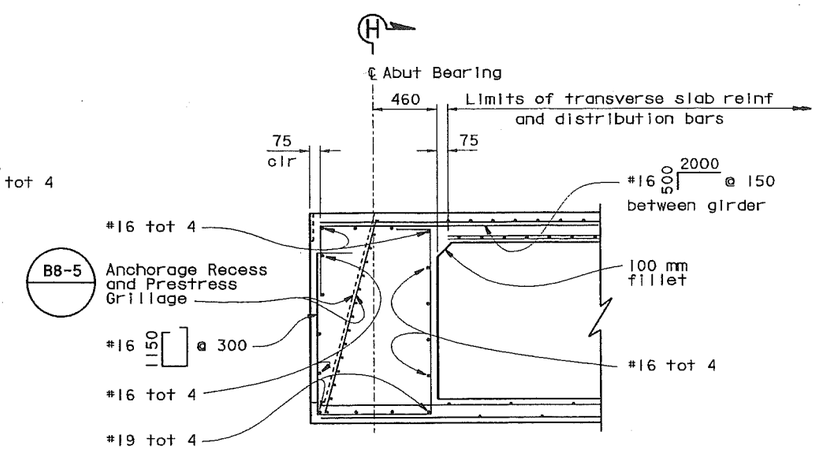

END DIAPHRAGM
1:20

ALL DIMENSIONS ARE IN MILLIMETERS UNLESS OTHERWISE SHOWN

DESIGN	BY Luqi Yang	CHECKED Tony Huang	
DETAILS	BY Stevy Lee	CHECKED Tony Huang	
QUANTITIES	BY Javid Sharifi	CHECKED Bill Addlespurger	

STATE OF CALIFORNIA
DEPARTMENT OF TRANSPORTATION

DIVISION OF STRUCTURES
STRUCTURE DESIGN 12

BRIDGE NO. 37-0582K
KILOMETER POST 16.7

PENITENCIA CREEK BR (ON-RAMP)
BENT DETAILS NO. 2

STRUCTURES DESIGN DETAIL SHEET (METRIC) (REV. 3/1/99)

ORIGINAL SCALE IN MILLIMETERS FOR REDUCED PLANS 0 10 20 30 40 50 60 70 80 90 100

CU 04
EA 285521

DISREGARD PRINTS BEARING EARLIER REVISION DATES

REVISION DATES (PRELIMINARY STAGE ONLY) 2-2-2000 05-18-00 09-05-00

SHEET 14 OF 22

FILE => cebnt02.dgn

USERNAME = tow DATE PLOTTED => 21-MAR-2001 TIME PLOTTED => 10:40

DIST	COUNTY	ROUTE	KILOMETER POST TOTAL PROJECT	SHEET No	TOTAL SHEETS
04	SCl, Ala	880	15.3/16.9, R0.0/R0.7	451	495

Caltrans Metric

REGISTERED CIVIL ENGINEER

3-5-01
PLANS APPROVAL DATE

REGISTERED PROFESSIONAL ENGINEER — Luqi Yang, No. 49908, Exp. 09-30-04, CIVIL, STATE OF CALIFORNIA

The State of California or its officers or agents shall not be responsible for the accuracy or completeness of electronic copies of this plan sheet.

Cal-Trans now has a web site! To get to the web site, go to: http://www.dot.ca.gov

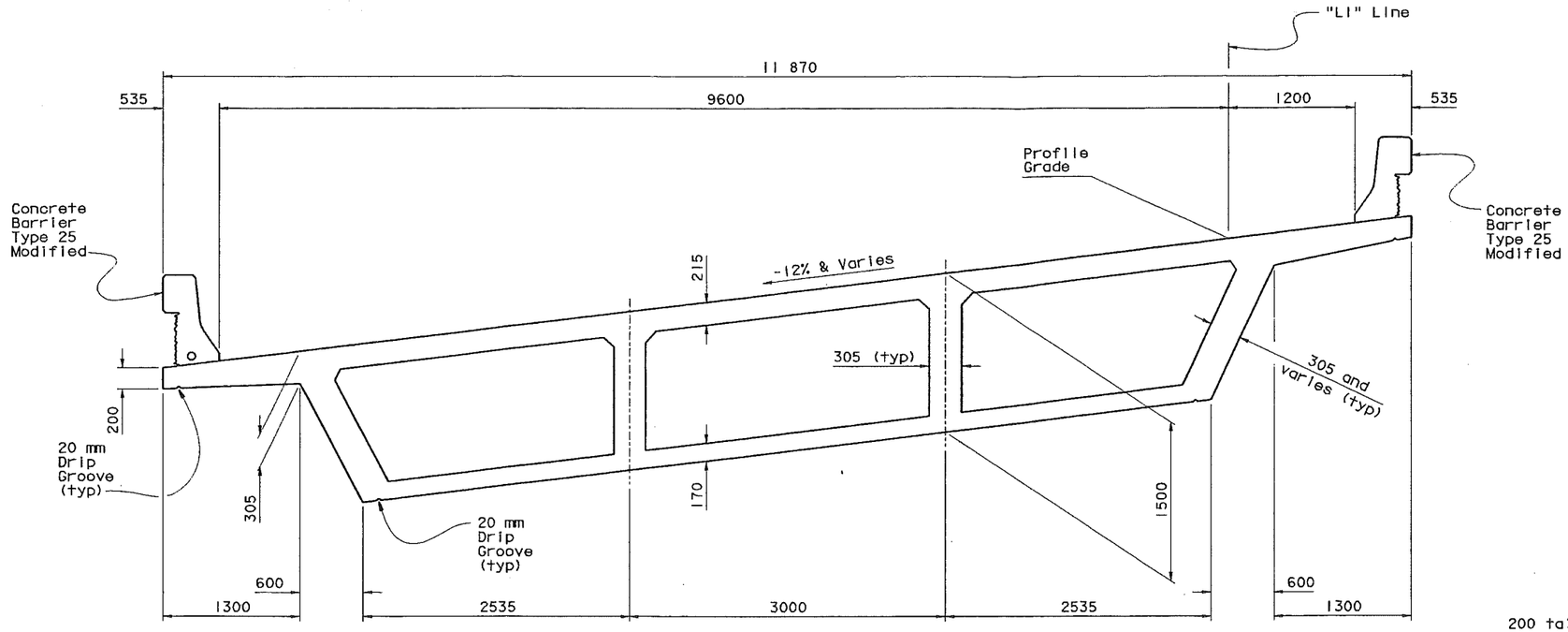

TYPICAL SECTION

1:25

B7-1

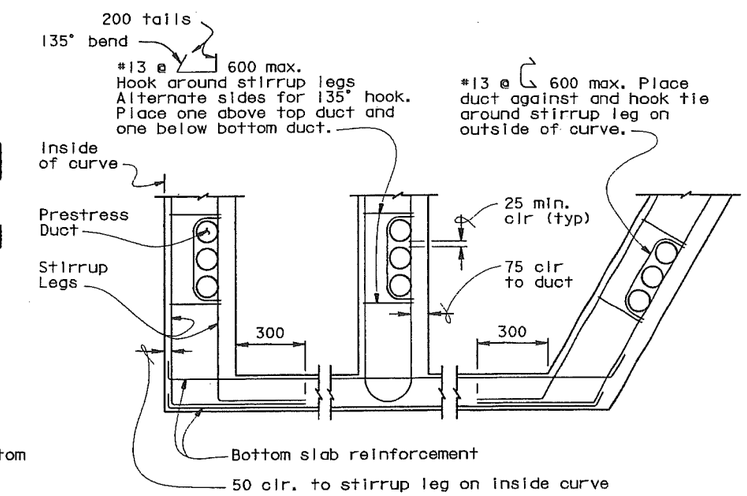

Note:
Details shown are for a curve to the left with the section taken looking ahead on station. These details supersede duct patterns shown in Standard Plan B8-5.

PART GIRDER SECTION

No Scale

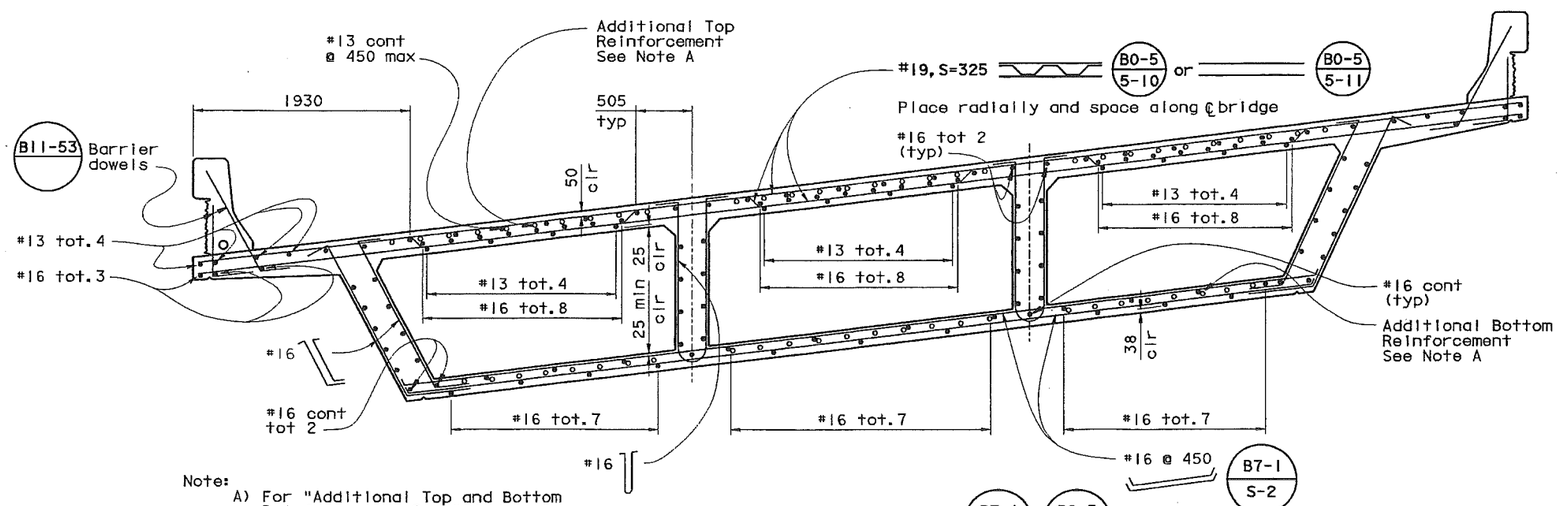

Note:
A) For "Additional Top and Bottom Reinforcement, See "Girder Reinforcement" sheet.

PART TYPICAL SECTION

1:25

B7-1 B0-5 5-15

ALL DIMENSIONS ARE IN MILLIMETERS UNLESS OTHERWISE SHOWN

	BY	CHECKED
DESIGN	Luqi Yang	Tony Huang
DETAILS	Stevy Lee	Tony Huang
QUANTITIES	Javid Sharifi	Bill Addlespurger

STATE OF CALIFORNIA
DEPARTMENT OF TRANSPORTATION

DIVISION OF STRUCTURES
STRUCTURE DESIGN 12

BRIDGE NO. 37-0582K
KILOMETER POST 16.7

PENITENCIA CREEK BR (ON-RAMP)
TYPICAL SECTION

STRUCTURES DESIGN DETAIL SHEET (METRIC) (REV. 3/1/99)

ORIGINAL SCALE IN MILLIMETERS FOR REDUCED PLANS 0 10 20 30 40 50 60 70 80 90 100

CU 04
EA 285521

FILE => cftyp.dgn

DISREGARD PRINTS BEARING EARLIER REVISION DATES

REVISION DATES (PRELIMINARY STAGE ONLY) 3-21-2000 05-18-00 5-11-00

SHEET 15 OF 22

USERNAME => trclew DATE PLOTTED => 21-MAR-2001 TIME PLOTTED => 10:41

DIST	COUNTY	ROUTE	KILOMETER POST TOTAL PROJECT	SHEET No	TOTAL SHEETS
04	SCl, Ala	880	15.3/16.9, R0.0/R0.7	452	495

Caltrans Metric

REGISTERED CIVIL ENGINEER

3-5-01
PLANS APPROVAL DATE

REGISTERED PROFESSIONAL ENGINEER — Lugi Yang, No. 49908, Exp. 09-30-04, CIVIL, STATE OF CALIFORNIA

The State of California or its officers or agents shall not be responsible for the accuracy or completeness of electronic copies of this plan sheet.

Cal-Trans now has a web site! To get to the web site, go to: http://www.dot.ca.gov

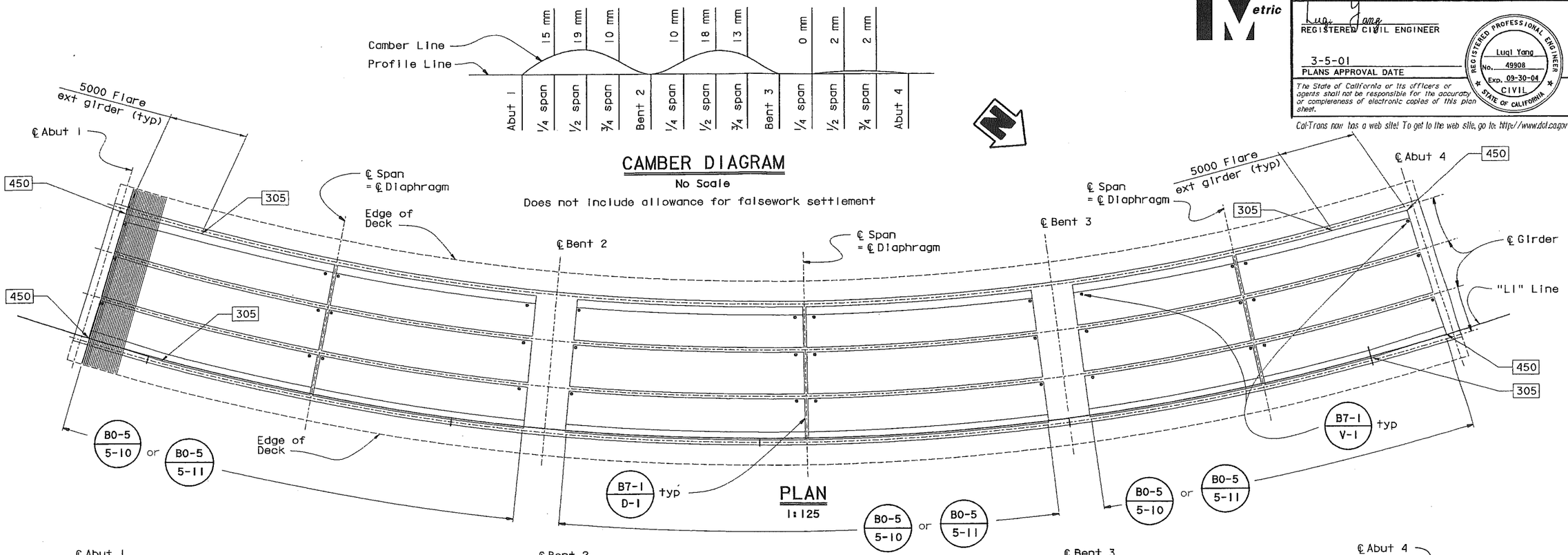

CAMBER DIAGRAM

No Scale

Does not include allowance for falsework settlement

LONGITUDINAL SECTION

1:125

Note: L = Length along each girder from ℄ Bent to ℄ Bent.

ALL DIMENSIONS ARE IN MILLIMETERS UNLESS OTHERWISE SHOWN

DESIGN	BY Lugi Yang	CHECKED Tony Huang	
DETAILS	BY Stevy Lee	CHECKED Tony Huang	
QUANTITIES	BY Javid Sharifi	CHECKED Bill Addlespurger	

STATE OF CALIFORNIA
DEPARTMENT OF TRANSPORTATION

DIVISION OF STRUCTURES
STRUCTURE DESIGN 12

BRIDGE NO. 37-0582K
KILOMETER POST 16.7

PENITENCIA CREEK BR (ON-RAMP)
GIRDER LAYOUT

STRUCTURES DESIGN DETAIL SHEET (METRIC) (REV. 3/1/99)

ORIGINAL SCALE IN MILLIMETERS FOR REDUCED PLANS 0 10 20 30 40 50 60 70 80 90 100

CU 04
EA 285521

FILE => cggir.dgn

DISREGARD PRINTS BEARING EARLIER REVISION DATES → 05-10-00

REVISION DATES (PRELIMINARY STAGE ONLY)

SHEET 16 OF 22

USERNAME => trolow DATE PLOTTED => 21-MAR-2001 TIME PLOTTED => 10:41

DIST	COUNTY	ROUTE	KILOMETER POST TOTAL PROJECT	SHEET No	TOTAL SHEETS
04	SCl, Ala	880	15.3/16.9, R0.0/R0.7	453	495

Caltrans Metric

Luqi Yang
REGISTERED CIVIL ENGINEER

3-5-01
PLANS APPROVAL DATE

REGISTERED PROFESSIONAL ENGINEER
Luqi Yang
No. 49908
Exp. 09-30-04
CIVIL
STATE OF CALIFORNIA

The State of California or its officers or agents shall not be responsible for the accuracy or completeness of electronic copies of this plan sheet.

Cal-Trans now has a web site! To get to the web site, go to: http://www.dot.ca.gov

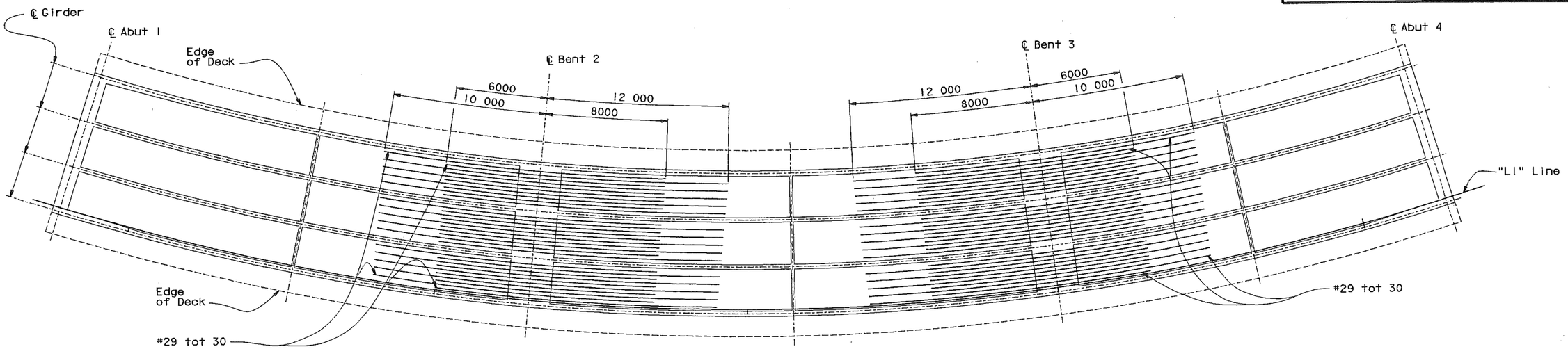

TOP REINFORCEMENT

1:125

Note:
All bars in Top Reinforcement are # 29 bars

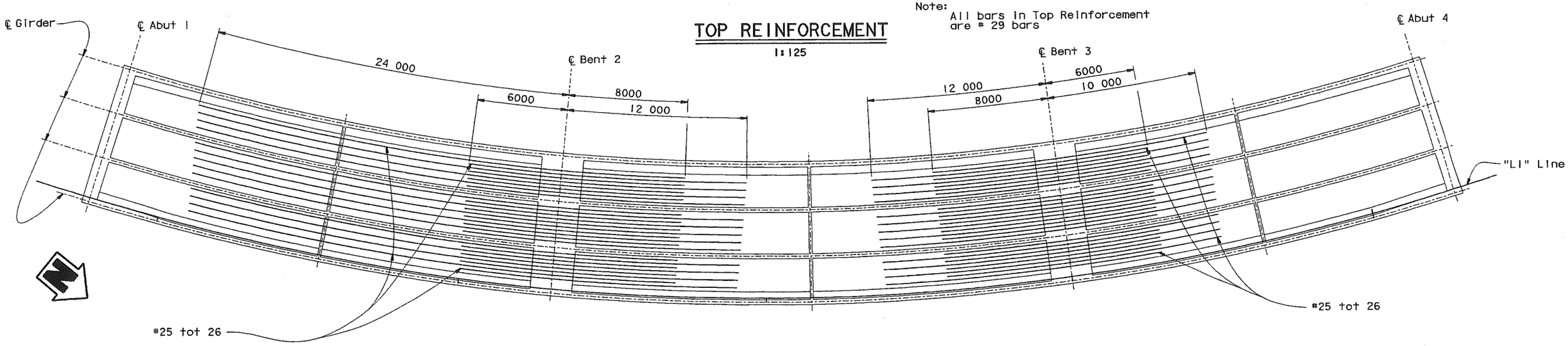

BOTTOM REINFORCEMENT

1:125

Note:
All bars in Bottom Reinforcement are # 25 bars

ALL DIMENSIONS ARE IN MILLIMETERS UNLESS OTHERWISE SHOWN

	BY	CHECKED
DESIGN	Luqi Yang	Tony Huang
DETAILS	Stevy Lee	Tony Huang
QUANTITIES	Javid Sharifi	Bill Addlespurger

STATE OF CALIFORNIA
DEPARTMENT OF TRANSPORTATION

DIVISION OF STRUCTURES
STRUCTURE DESIGN 12

BRIDGE NO. 37-0582K
KILOMETER POST 16.7

PENITENCIA CREEK BR (ON-RAMP)
GIRDER REINFORCEMENT

STRUCTURES DESIGN DETAIL SHEET (METRIC) (REV. 3/1/99)

ORIGINAL SCALE IN MILLIMETERS FOR REDUCED PLANS 0 10 20 30 40 50 60 70 80 90 100

CU 04
EA 285521

FILE => cjgrf.dgn

DISREGARD PRINTS BEARING EARLIER REVISION DATES

REVISION DATES (PRELIMINARY STAGE ONLY) 4-5-2000 05-10-00

SHEET 17 OF 22

USERNAME => tfrclbw DATE PLOTTED => 21-MAR-2001 TIME PLOTTED => 10:41

DIST	COUNTY	ROUTE	KILOMETER POST TOTAL PROJECT	SHEET No	TOTAL SHEETS
04	SCl, Ala	880	15.3/16.9, R0.0/R0.7	454	495

Caltrans Metric

Luqi Yang
REGISTERED CIVIL ENGINEER

3-5-01
PLANS APPROVAL DATE

REGISTERED PROFESSIONAL ENGINEER — Luqi Yang — No. 049908 — Exp. 09-30-04 — CIVIL — STATE OF CALIFORNIA

The State of California or its officers or agents shall not be responsible for the accuracy or completeness of electronic copies of this plan sheet.

Cal-Trans now has a web site! To get to the web site, go to: http://www.dot.ca.gov

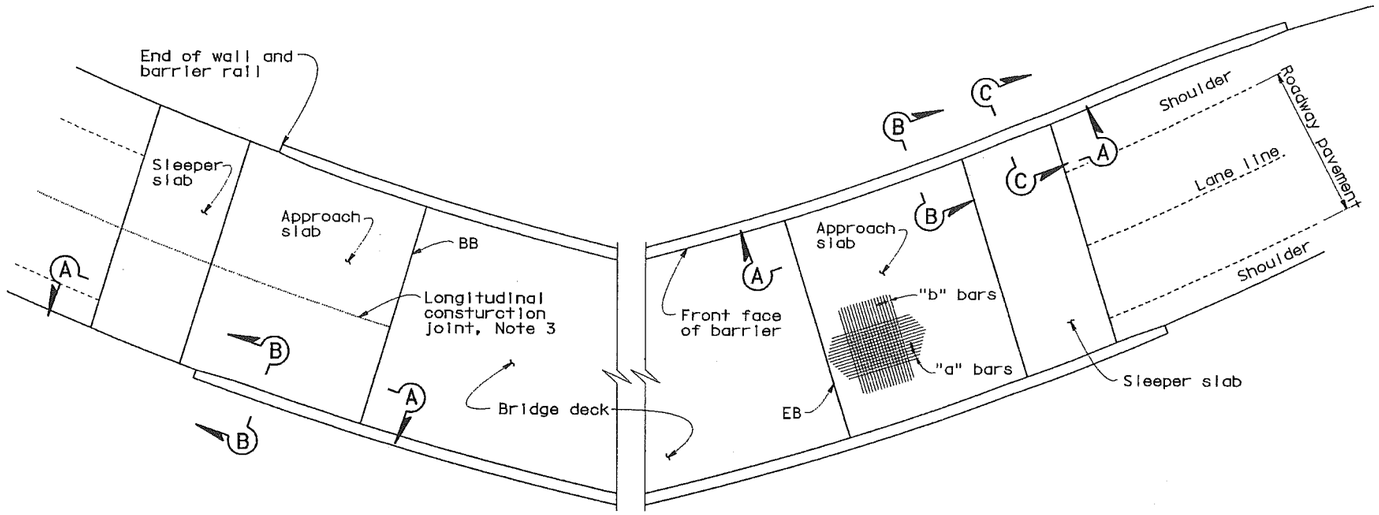

PLAN

Note: For Sections 'B-B' and 'C-C', see "Structure Approach Type N(14D) Details No. 2" sheet.

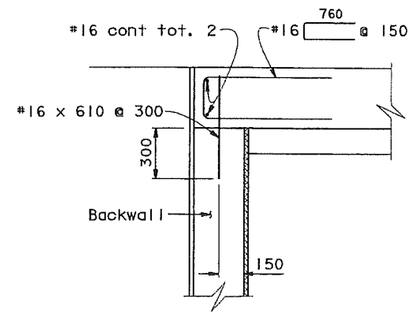

ABUTMENT TIE DETAIL

No Scale

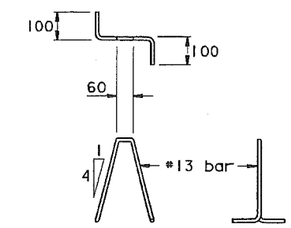

BAR CHAIR DETAIL

No scale

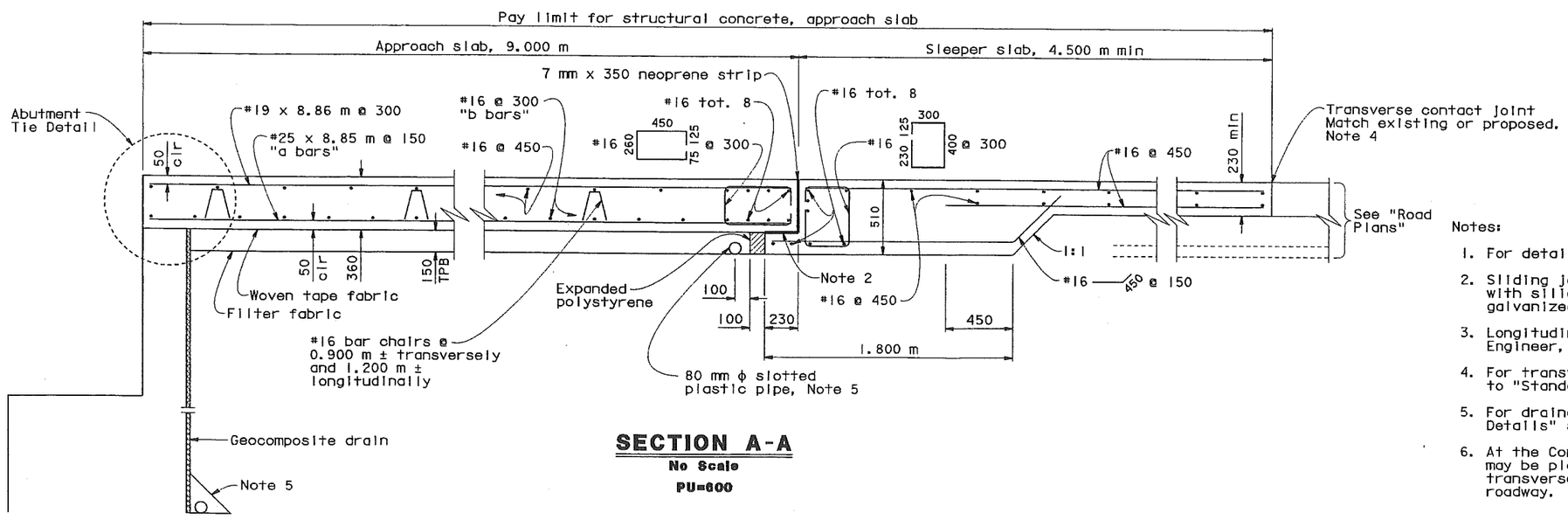

SECTION A-A

No Scale

PU=600

Notes:

1. For details not noted or shown, see "Structure Plans".
2. Sliding joint 7 mm x 225 mm neoprene strip, coat top with silicone grease and cover with 225 mm x 1.613 mm galvanized sheet metal.
3. Longitudinal construction joints, when permitted by the Engineer, shall be located on lane lines.
4. For transverse contact joint with new PCC paving, refer to "Standard Plan A35-A.
5. For drainage details, see "Structure Approach Drainage Details" sheet.
6. At the Contractors option, slab transverse reinforcement may be placed parallel to paving notch. Spacing of transverse reinforcement is measured along center line roadway.

ALL DIMENSIONS ARE IN MILLIMETERS UNLESS OTHERWISE SHOWN

	BY	CHECKED
DESIGN	Luqi Yang	Tony Huang
DETAILS	K Christopher	Tony Huang
QUANTITIES	Javid Sharifi	Bill Addlespurger

STATE OF CALIFORNIA
DEPARTMENT OF TRANSPORTATION

DIVISION OF STRUCTURES
STRUCTURE DESIGN 12

BRIDGE NO. 37-0582K
KILOMETER POST 16.7

PENITENCIA CREEK BR (ON-RAMP)

STRUCTURE APPROACH TYPE N(14D) DETAILS NO. 1

STRUCTURES DESIGN DETAIL SHEET (METRIC) (REV. 3/1/99)

ORIGINAL SCALE IN MILLIMETERS FOR REDUCED PLANS 0 10 20 30 40 50 60 70 80 90 100

CU 04
EA 285521

FILE => cksop01.dgn

DISREGARD PRINTS BEARING EARLIER REVISION DATES

REVISION DATES (PRELIMINARY STAGE ONLY) 01-26-00 01-27-00 01-28-00 05-10-00

SHEET 18 OF 22

USERNAME => trolbw DATE PLOTTED => 21-MAR-2001 TIME PLOTTED => 10:41

RELEASED 5-30-97

DIST.	COUNTY	ROUTE	KILOMETER POST TOTAL PROJECT	SHEET NO.	TOTAL SHEETS
04	SCl, Ala	880	15.3/16.9, R0.0/R0.7	455	495

Caltrans Metric

REGISTERED ENGINEER - CIVIL

3-5-01
PLANS APPROVAL DATE

REGISTERED PROFESSIONAL ENGINEER Lugi Yang No. 049908 Exp. 09-30-04 CIVIL STATE OF CALIFORNIA

The State of California or its officers or agents shall not be responsible for the accuracy or completeness of electronic copies of this plan sheet.

Cal-Trans now has a web site! To get to the web site, go to: http://www.dot.ca.gov

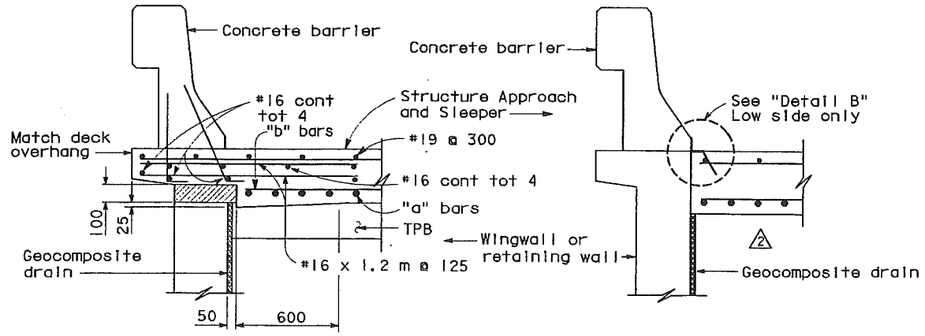

SECTION B-B 1 **SECTION C-C**

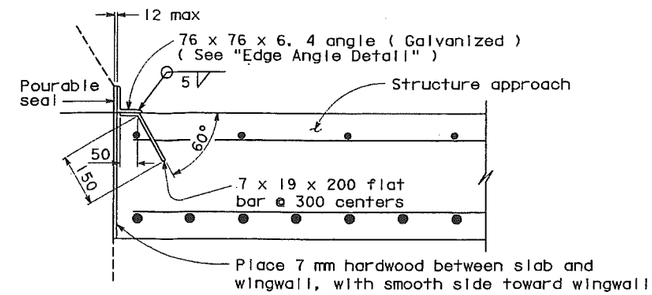

DETAIL B

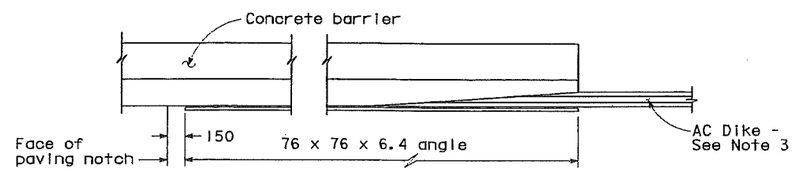

EDGE ANGLE DETAIL

NOTES:

1. AC Dike and MBGR, if required, are shown for typical application only. For details of this project, see "Road Plans".
2. Optional DF (Douglas Fir) block spacers attached as shown, may be used adjacent to Approach Slabs. Use 90 x 190 x 350 DF block spacer for 250 x 250 DF posts and 90 x 143 x 350 DF block spacer for 143 x 190 DF posts.
3. AC Dike, when required, shall be placed as shown. When AC Dike is not required, end angle at beginning of barrier transition, end of wingwall or end of Approach Slab, as applicable.

Remove all polystyrene.

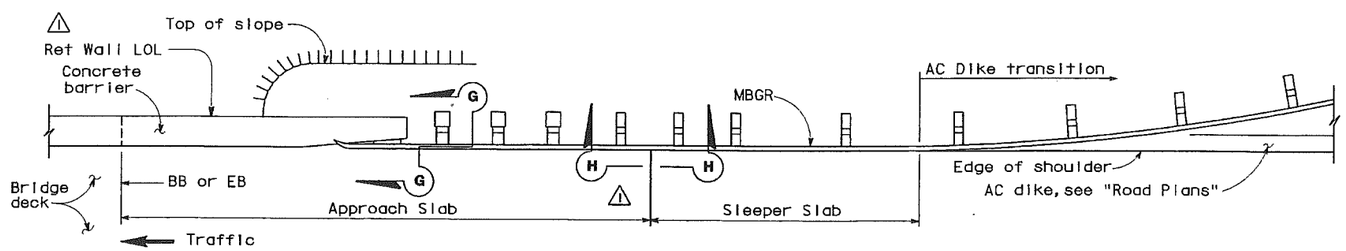

PLAN (SEE NOTE 1)

GUARDRAIL AND DIKE DETAILS

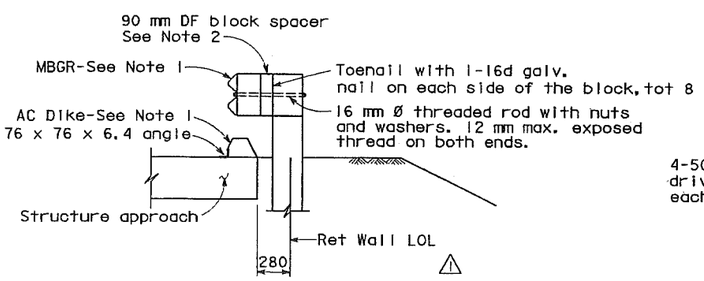

SECTION G-G

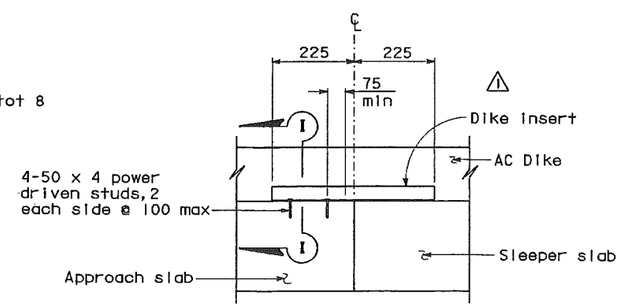

SECTION H-H 2

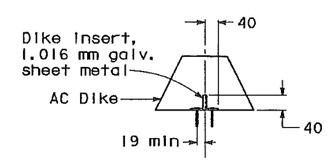

SECTION I-I

SPECIAL DETAILS

NO SCALE

ALL DIMENSIONS ARE IN MILLIMETERS UNLESS OTHERWISE SHOWN

STANDARD DRAWING

FILE NO. XS 22-16.1	DESIGN BY M. TRAFFALIS	CHECKED E. THORKILDSEN	APPROVAL RECOMMENDED BY
DRAWING DATE REVISED	DETAILS BY R. YEE	CHECKED E. THORKILDSEN	DESIGN SUPERVISOR
	SUBMITTED BY M. HA		

DS OSD 2147A (METRIC) (REV. 2/25/97)

1 Revised notes
2 Revised detail

STATE OF CALIFORNIA DEPARTMENT OF TRANSPORTATION

DIVISION OF STRUCTURES STRUCTURE DESIGN 12

BRIDGE NO. 37-0582K
KILOMETER POST 16.7

PENITENCIA CREEK BR (ON-RAMP)

STRUCTURE APPROACH TYPE N(14D) DETAILS NO. 2

ORIGINAL SCALE IN MILLIMETERS FOR REDUCED PLANS 0 10 20 30 40 50 60 70 80 90 100

CU 04
EA 285521

DISREGARD PRINTS BEARING EARLIER REVISION DATES

REVISION DATES (PRELIMINARY STAGE ONLY) 01-29-00 03-28-00 05-10-00

SHEET 19 OF 22

USERNAME => trclew

cksap02.dgn

XS22161.DGN

DATE PLOTTED => 21-MAR-2001 TIME PLOTTED => 10:41

RELEASED 4-23-98

DIST	COUNTY	ROUTE	KILOMETER POST TOTAL PROJECT	SHEET NO.	TOTAL SHEETS
04	SCl, Ala	880	15.3/16.9, R0.0/R0.7	456	495

Caltrans Metric

REGISTERED ENGINEER - CIVIL

3-5-01
PLANS APPROVAL DATE

REGISTERED PROFESSIONAL ENGINEER — Lugi Yang — No. 049908 — Exp. 09-30-04 — CIVIL — STATE OF CALIFORNIA

The State of California or its officers or agents shall not be responsible for the accuracy or completeness of electronic copies of this plan sheet.

Cal-Trans now has a web site! To get to the web site, go to: http://www.dot.ca.gov

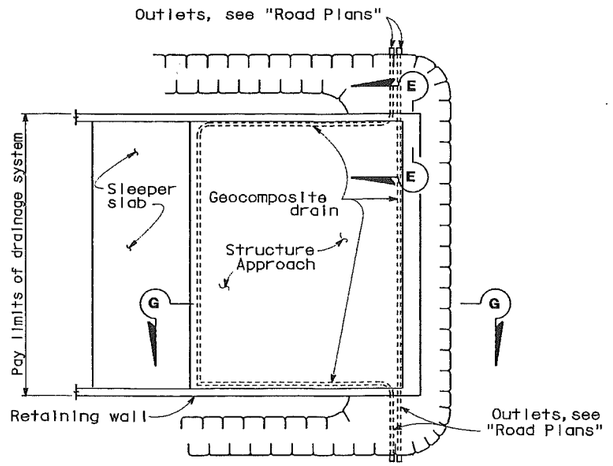

Abut 1

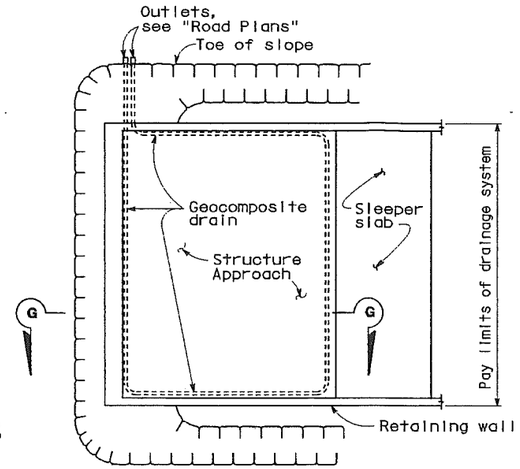

Abut 4

TYPICAL PLAN 2

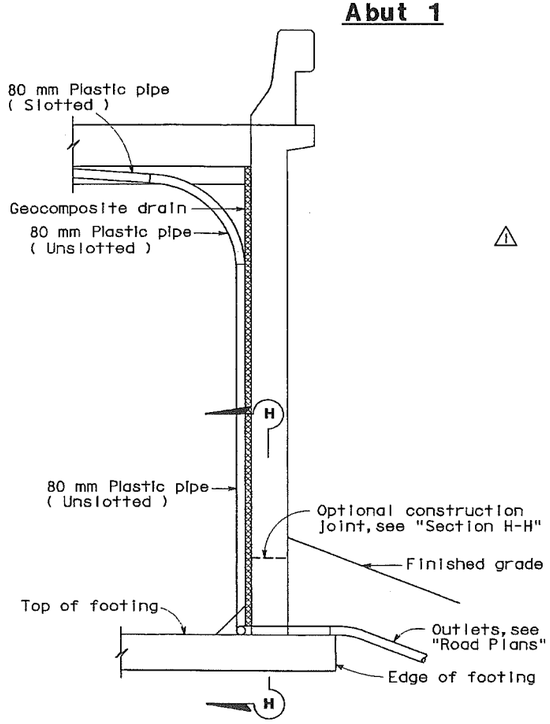

SECTION E-E

NOTE: Bends and junctions in 80 mm plastic pipe are 750 mm radius min.

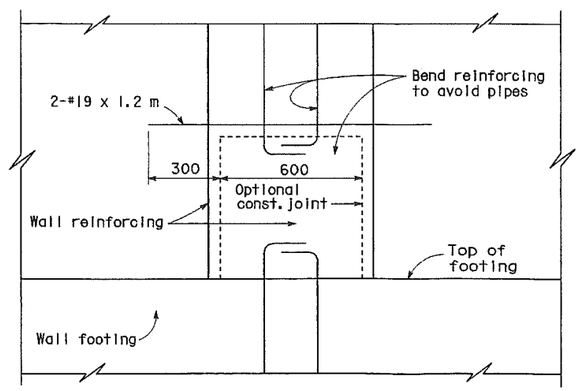

SECTION H-H

1

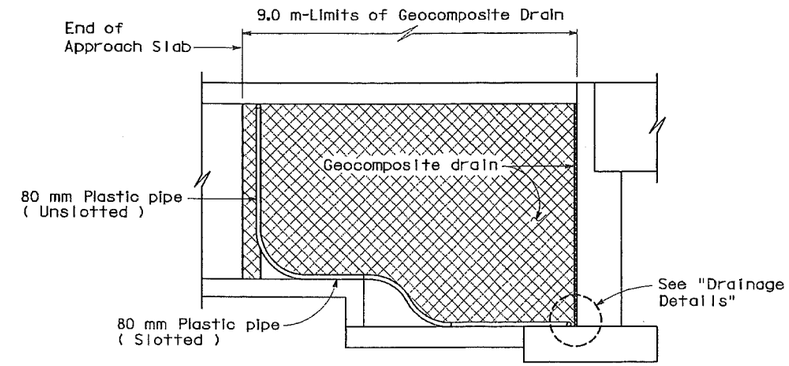

RETAINING WALL WINGWALL

SECTION G-G

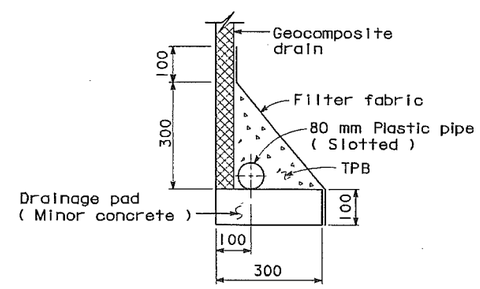

WITHOUT FOOTING

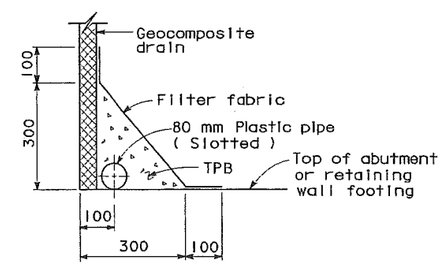

WITH FOOTING

DRAINAGE DETAILS

SPECIAL DETAILS

NO SCALE

ALL DIMENSIONS ARE IN MILLIMETERS UNLESS OTHERWISE SHOWN

TIME PLOTTED => 10:41
DATE PLOTTED => 21-MAR-2001

STANDARD DRAWING

FILE NO. XS 22-17	DESIGN BY M. TRAFFALIS	CHECKED E. THORKILDSEN	APPROVAL RECOMMENDED BY
DRAWING DATE REVISED	DETAILS BY R. YEE	CHECKED E. THORKILDSEN	DESIGN SUPERVISOR
	SUBMITTED BY M. HA		

1 Deleted detail
2 Revised detail

STATE OF CALIFORNIA
DEPARTMENT OF TRANSPORTATION

DIVISION OF STRUCTURES
STRUCTURE DESIGN 12

BRIDGE NO. 37-0582K
KILOMETER POST 16.7

PENITENCIA CREEK BR (ON-RAMP)

STRUCTURE APPROACH DRAINAGE DETAILS

DS OSD 2147A (METRIC) (REV. 2/25/97)

ORIGINAL SCALE IN MILLIMETERS FOR REDUCED PLANS 0 10 20 30 40 50 60 70 80 90 100

CU 04
EA 285521

DISREGARD PRINTS BEARING EARLIER REVISION DATES

REVISION DATES (PRELIMINARY STAGE ONLY) 01-25-00 03-28-00 03-28-00 05-10-00

SHEET 20 OF 22

USERNAME => trclew
cksop03.dgn
XS2217.DGN

DIST.	COUNTY	ROUTE	KILOMETER POST TOTAL PROJECT	SHEET NO.	TOTAL SHEETS
04	SCl, Ala	880	15.3/16.9, R0.0/R0.7	457	495

Caltrans Metric

REGISTERED GEOLOGIST

3-5-01
PLANS APPROVAL DATE

REGISTERED GEOLOGIST M. RICHARDS No. 5240 Exp. 07-31-04 REGISTERED GEOLOGIST STATE OF CALIFORNIA

The State of California or its officers or agents shall not be responsible for the accuracy or completeness of electronic copies of this plan sheet.

Caltrans now has a web site! To get to the web site, go to: http://www.dot.ca.gov

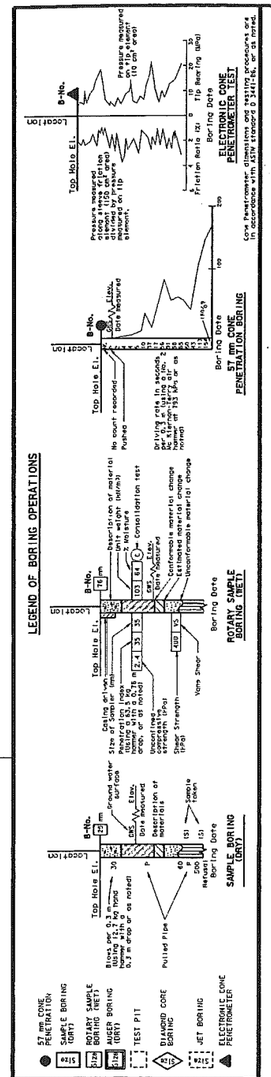

BENCH MARK

BM HV3 Elev. 4.159 m, NAVD 88'
Nail in SB shoulder Rte. 880, 16.17 m
Lt. Sta. 105+657 "A" C/L Rte. 880.

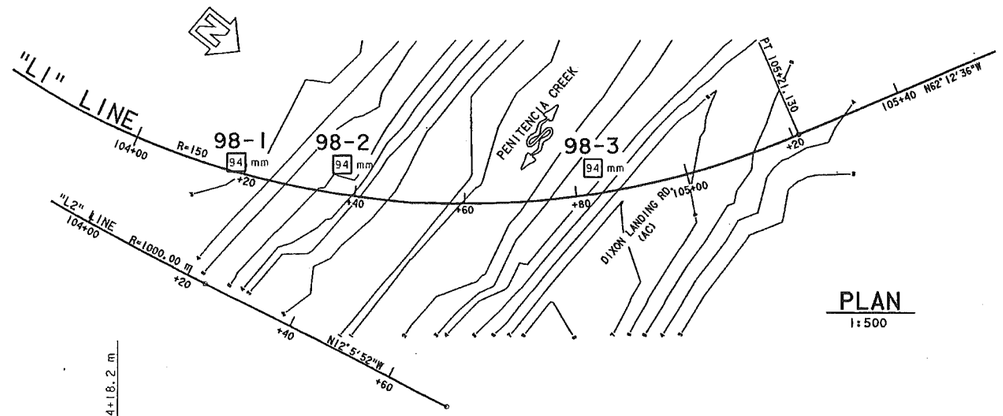

PLAN
1:500

NOTES:

1. Penetration Index generated with CME (140 lb) 63.5 Kg auto hammer.
2. qu=unconfined compressive strength, kPa, measured by pocket penetrometer-fleld test.
3. Su= Shear strength, kPa, measured by Torr Vane-fleld test.
4. Ground water surface not measured.

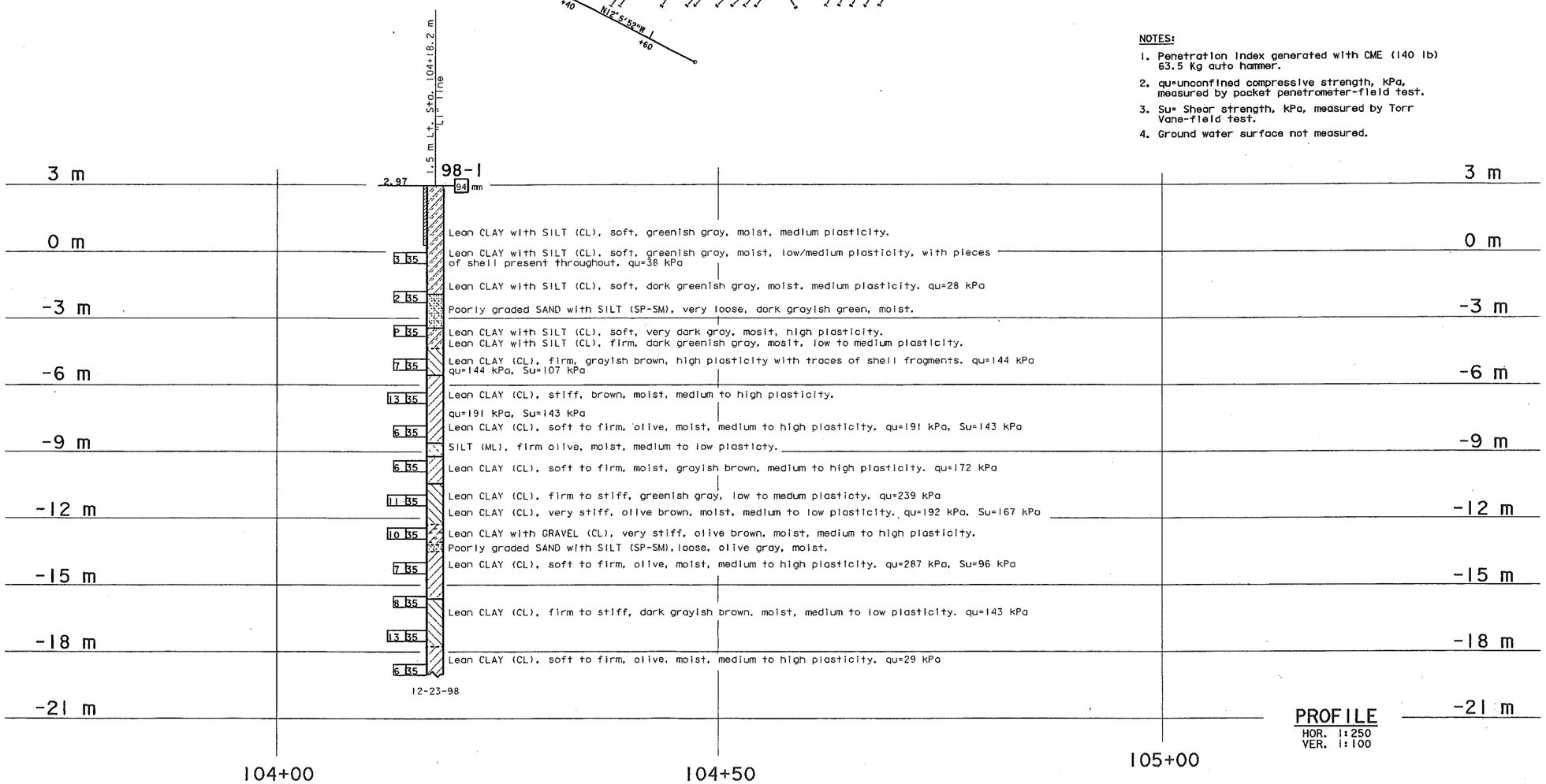

PROFILE
HOR. 1:250
VER. 1:100

ALL DIMENSIONS ARE IN METERS UNLESS OTHERWISE SHOWN

ENGINEERING SERVICE CENTER	STRUCTURE FOUNDATIONS
DRAWN BY IRMA G-REMMEN 3/99	
CHECKED BY M. RICHARDS 3/99	

FIELD INVESTIGATION BY: H. SALIMI

STATE OF CALIFORNIA DEPARTMENT OF TRANSPORTATION

DIVISION OF STRUCTURES STRUCTURE DESIGN 12

BRIDGE NO. 37-0582K
KILOMETER POST 16.7

PENITENCIA CREEK BR (ON-RAMP)
LOG OF TEST BORINGS 1 OF 2

CU 04
EA 285521

DISREGARD PRINTS BEARING EARLIER REVISION DATES

REVISION DATES (PRELIMINARY STAGE ONLY) 3-31-99 4-22-99 05-10-00

SHEET 21 OF 22

ORIGINAL SCALE IN MILLIMETERS FOR REDUCED PLANS 0 10 20 30 40 50 60 70 80 90 100

FILE => clltb01.dgn

USERNAME => trc16w DATE PLOTTED => 21-MAR-2001 TIME PLOTTED => 10:41

OST GEOLOGIST LOG OF TEST BORINGS SHEET (METRIC) (REV. 11/18/97)

OSF GEOLOGIST LOG OF TEST BORINGS SHEET (METRIC) (REV. 11/18/97)

CONSISTENCY CLASSIFICATION FOR SOILS

According to the Standard Penetration Test

SPT N-Value (Blows/ 0.3m)	Granular	SPT N-Value (Blows/ 0.3m)	Cohesive
0-4	Very Loose	<2	Very Soft
5-10	Loose	2-4	Soft
11-30	Medium Dense	5-8	Firm
31-50	Dense	9-15	Stiff
>50	Very Dense	16-30	Very stiff
		>31	Hard

NOTE: Classification of earth material as shown on this sheet is based upon field inspection and is not to be construed to imply mechanical analysis.

LEGEND OF EARTH MATERIALS

GRAVEL, SAND, SILT, CLAY, SANDY CLAY or CLAYEY SAND, SANDY SILT or SILTY SAND, SILTY CLAY, CLAYEY SILT, PEAT and/or ORGANIC MATTER, FILL MATERIAL, COBBLES AND/OR BOULDERS, IGNEOUS ROCK, SEDIMENTARY ROCK, METAMORPHIC ROCK

LEGEND OF BORING OPERATIONS

57 mm CONE PENETRATION; SAMPLE BORING (DRY); ROTARY SAMPLE BORING (WET); AUGER BORING (DRY); TEST PIT; DIAMOND CORE BORING; JET BORING; ELECTRONIC CONE PENETROMETER

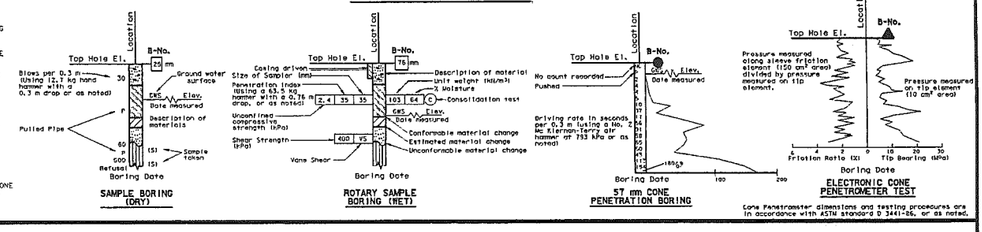

Cone Penetrometer dimensions and testing procedures are in accordance with ASTM standard D 3441-86, or as noted.

FOR PLAN VIEW, SEE
"LOG OF TEST BORINGS" SHEET 1 OF 2

NOTES:

1. Penetration Index generated with CME (140 lb) 63.5 Kg auto hammer.
2. qu=unconfined compressive strength, kPa, measured by pocket penetrometer-field test.
3. Su= Shear strength, kPa, measured by Torr Vane-field test.
4. Ground water surface not measured.

PROFILE
HOR. 1:250
VER. 1:100

ALL DIMENSIONS ARE IN METERS UNLESS OTHERWISE SHOWN

ENGINEERING SERVICE CENTER — STRUCTURE FOUNDATIONS

DRAWN BY: IRMA G-REEMEN 3/99
CHECKED BY: M. RICHARDS 3/99
FIELD INVESTIGATION BY: M. RICHARDS

ORIGINAL SCALE IN MILLIMETERS FOR REDUCED PLANS

STATE OF CALIFORNIA
DEPARTMENT OF TRANSPORTATION
DIVISION OF STRUCTURES
STRUCTURE DESIGN 12

CU 04
EA 285521
FILE => c11tb02.dgn

BRIDGE NO. 37-0582K
KILOMETER POST 16.7

DISCARD PRIVATE DRAWING EARLIER REVISION DATES

REVISION DATES (PRELIMINARY STAGE ONLY)
1-29-99 4-29-99 10-10-00

PENITENCIA CREEK BR (ON-RAMP)

LOG OF TEST BORINGS 2 OF 2

SHEET 22 OF 22

Caltrans Metric

PLANS APPROVAL DATE 3-5-01

REGISTERED GEOLOGIST

The State of California or its officers or agents shall not be responsible for the accuracy or completeness of electronic copies of this plan sheet.

REGISTERED GEOLOGIST M. RICHARDS No. 5240 Exp. 07-31-01 STATE OF CALIFORNIA

DIST.	COUNTY	ROUTE	KILOMETER POST TOTAL PROJECT	SHEET NO.	TOTAL SHEETS
04	SCl, Ala	880	15.3/16.9, R0.0/R0.7	458	495

USERNAME => trclew DATE PLOTTED => 21-MAR-2001 TIME PLOTTED => 10:42

DIST	COUNTY	ROUTE	POST MILES TOTAL PROJECT	SHEET NO.	TOTAL SHEETS
04	SCI	880			

REGISTERED - CERTIFIED ENGINEERING GEOLOGIST

PLANS APPROVAL DATE

REGISTERED GEOLOGIST R.C. WILLIAMS No. 1719 Exp. 6-30-88 STATE OF CALIFORNIA

Caltrans now has a web site! To get to the web site, go to: http://www.dot.ca.gov

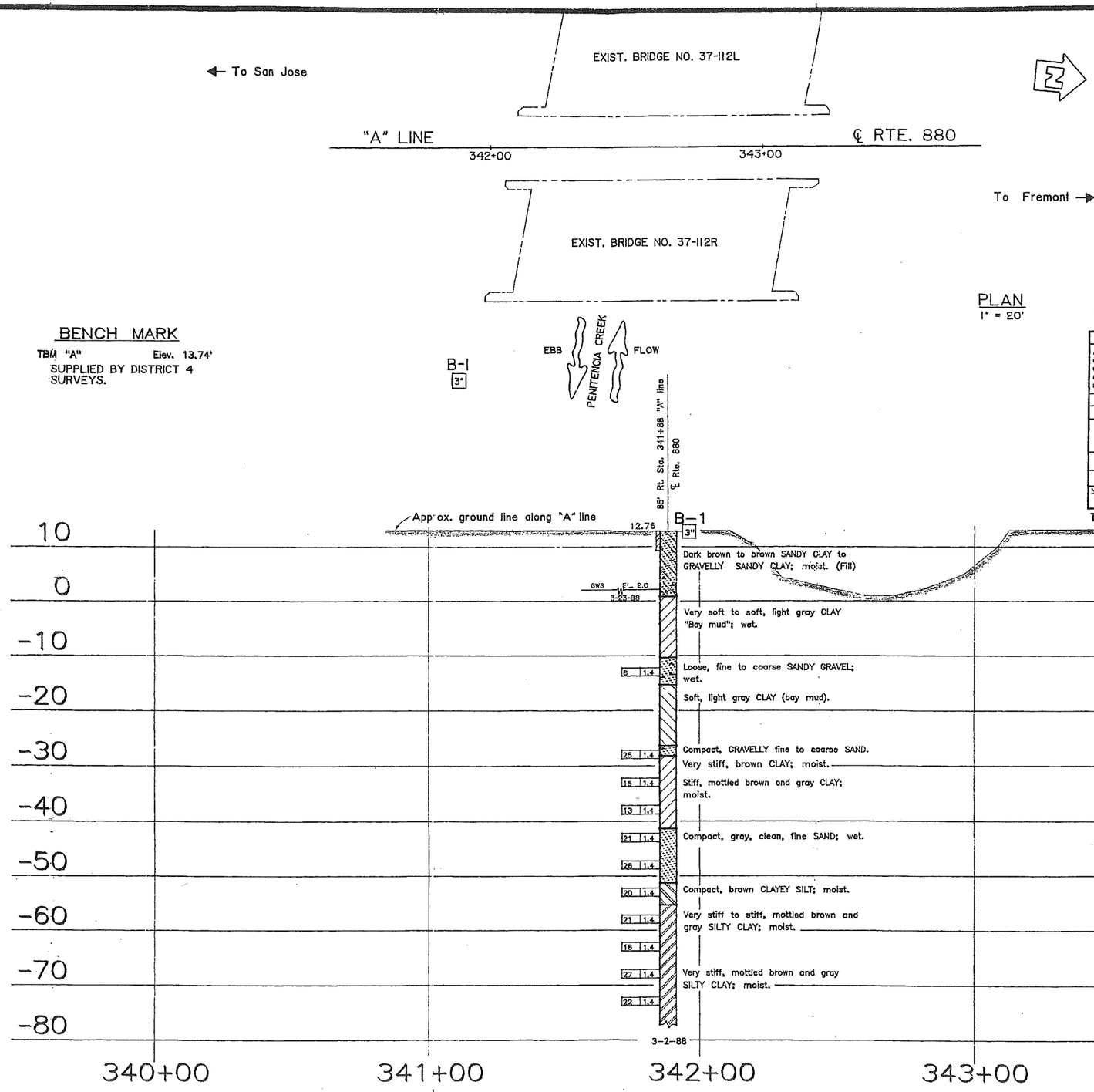

BENCH MARK

TBM "A" Elev. 13.74'
SUPPLIED BY DISTRICT 4 SURVEYS.

PLAN
1" = 20'

NOTES:

1. Equivalent metric "A" line stationing, as shown on the General Plan and LOTB sheet 1 of 8:

"A" Line English	"A" Line Metric
342+00	104+24
343+00	104+54.6

2. The equivalent metric stationing for Boring B-1 is 42.9 m Rt. Sta. 104+20, "B" line.

STRUCTURAL FOUNDATIONS BRANCH - ENGINEERING SERVICE CENTER

As-Built Log of Test Borings sheet is considered an informational document only. As such, the State of California registration seal with signature, license number and registration certificate expiration date confirm that this is a true and accurate copy of the original document. It does not attest to the accuracy or validity of the information contained in the original document. This drawing is available and presented only for the convenience of any bidder, contractor or other interested party.

D.ST.	COUNTY	ROUTE	KILOMETER POST - TOTAL PROJECT	Sheet No.	Total Sheets
04	SCI, Alo	880	15.3/16.9, R0.0/R0.7	415	495

Mark A. Richards
REGISTERED GEOLOGIST

REGISTERED GEOLOGIST M. RICHARDS No. 5240 Exp. 7-31-00 STATE OF CALIFORNIA

DIXON LANDING OVERCROSSING (REPLACE)

LOG OF TEST BORINGS 6 OF 8

NOTE: A COPY OF THIS LOG OF TEST BORINGS IS AVAILABLE AT OFFICE OF STRUCTURE MAINTENANCE AND INVESTIGATIONS, SACRAMENTO, CALIFORNIA

CU: 04 28552
EA: ~~118541~~

BRIDGE No. 37-0581

To accompany plans dated 3-5-01

PROFILE

Hor. 1" = 20'
Ver 1" = 10'

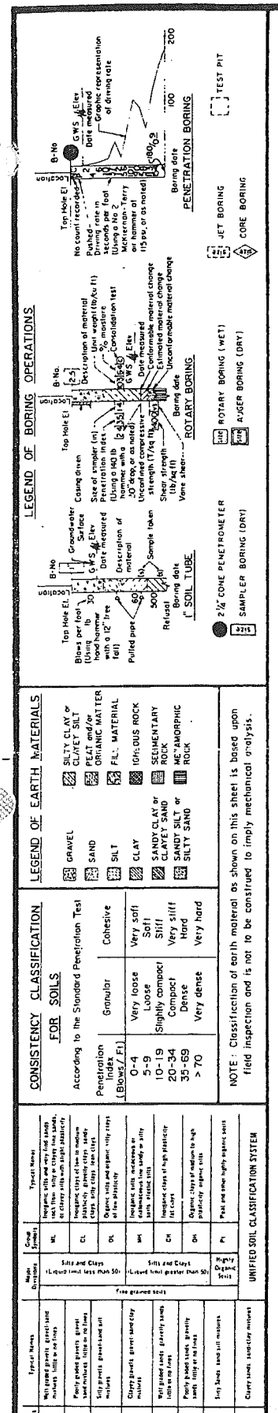

GEOTECHNICAL BRANCH - TRANSPORTATION LABORATORY

DRAWN BY I.G. HOWELL 1/88
CHECKED BY
PROJECT ENGINEER 39499 CE NO

CHARGE UNIT | EXPEND. AUTHOR | SPEC. DESIGN

State of CALIFORNIA DEPARTMENT OF TRANSPORTATION

STRUCTURES - DESIGN
PROJECT ENGINEER REGISTERED CIVIL ENGINEER NO.

BRIDGE NO. 37-112
POST MILE 10.4

PENITENCIA CREEK BRIDGE (WIDEN)
LOG OF TEST BORINGS 1 OF 3

ORIGINAL SCALE IN INCHES FOR REDUCED PLANS 0 1 2 3

CU 04
EA 112820

Disregard prints bearing earlier revision dates →

REVISION DATES (PRELIMINARY STAGE ONLY)

SHEET 32 OF 34

DS 8146

br370581#06of08.tif

I HEREBY CERTIFY THAT THIS IS A TRUE AND ACCURATE COPY OF THE ABOVE DOCUMENT TAKEN UNDER MY DIRECTION AND CONTROL ON THIS DATE IN SACRAMENTO, CALIFORNIA PURSUANT TO AUTHORIZATION BY THE DIRECTOR OF TRANSPORTATION.
DATE 1-28-80 SIGNATURE Joseph M Costa TITLE SUPERVISOR OF MICROFILM SERVICES

F-341 (10)

2 CAL. 1 86/113

IV SCL 69 A 6 6

JUNE 16 1952

BRIDGE DEPARTMENT

MICROFILMED

AS BUILT PLANS
Contract No. 53-4TC23

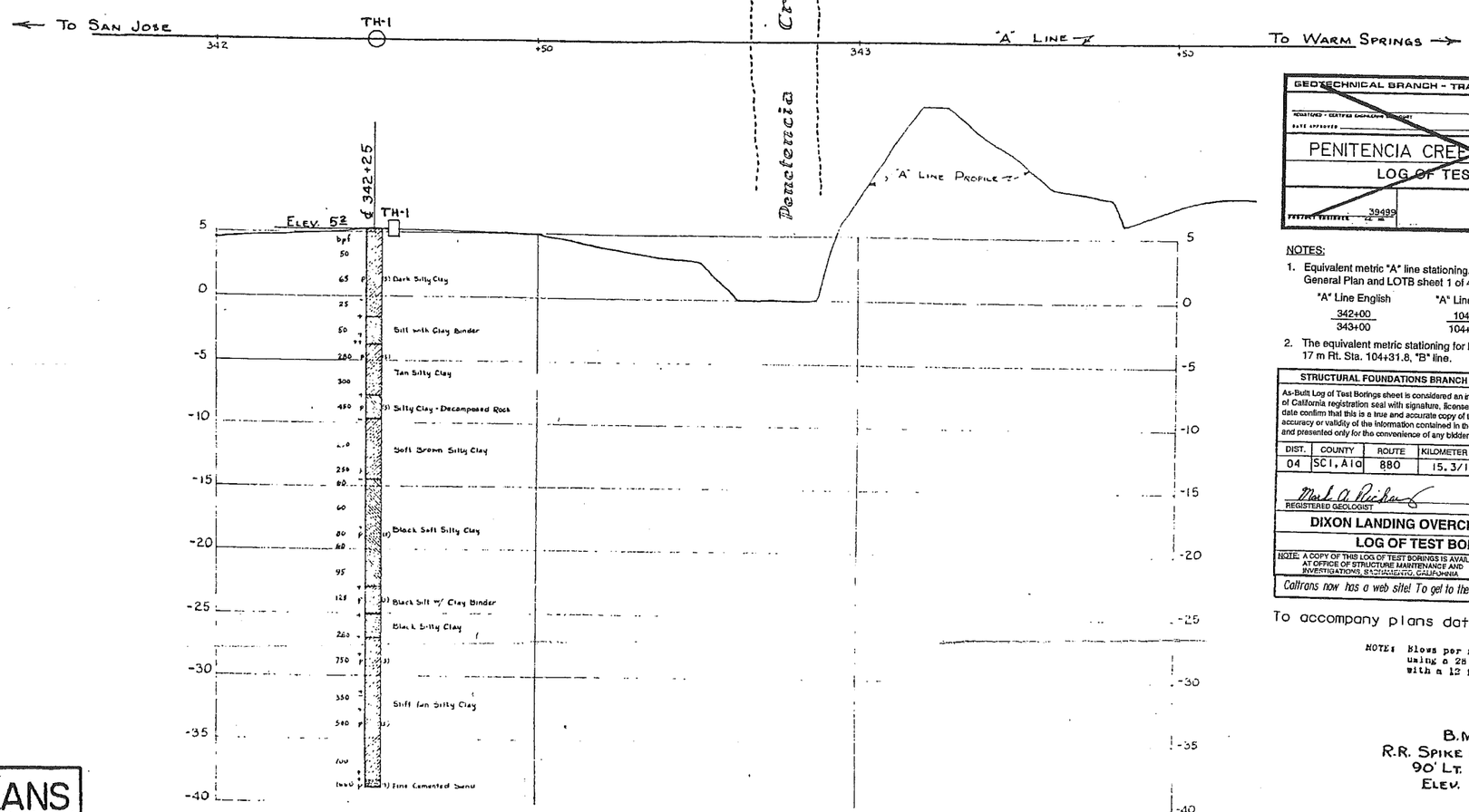

GEOTECHNICAL BRANCH - TRANSPORTATION LABORATORY

MONITORED - CERTIFIED ENGINEERING GEOLOGIST

DATE APPROVED

PENITENCIA CREEK BRIDGE (WIDEN)

LOG OF TEST BORINGS 2 OF 3

CONTRACT NUMBER 39499 | CU: 04 EA: 112820 | BRIDGE No. 37-112

REGISTERED GEOLOGIST R.C. WILHELMS No. 1719 Exp. 6/30/88 STATE OF CALIFORNIA

NOTES:

1. Equivalent metric "A" line stationing, as shown on the General Plan and LOTB sheet 1 of 4:

"A" Line English	"A" Line Metric
342+00	104+24
343+00	104+54.6

2. The equivalent metric stationing for Boring TH-1 is 17 m Rt. Sta. 104+31.8, "B" line.

STRUCTURAL FOUNDATIONS BRANCH - ENGINEERING SERVICE CENTER

As-Built Log of Test Borings sheet is considered an informational document only. As such, the State of California registration seal with signature, license number and registration certificate expiration date confirm that this is a true and accurate copy of the original document. It does not attest to the accuracy or validity of the information contained in the original document. This drawing is available and presented only for the convenience of any bidder, contractor or other interested party.

DIST.	COUNTY	ROUTE	KILOMETER POST - TOTAL PROJECT	Sheet No.	Total Sheets
04	SCl, Ala	880	15.3/16.9, R0.0/R0.7	416	495

REGISTERED GEOLOGIST

DIXON LANDING OVERCROSSING (REPLACE)

LOG OF TESTS BORINGS 7 OF 8

NOTE: A COPY OF THIS LOG OF TEST BORINGS IS AVAILABLE AT OFFICE OF STRUCTURE MAINTENANCE AND INVESTIGATIONS, SACRAMENTO, CALIFORNIA | CU: 04 285521 EA: ~~110531~~ | BRIDGE No. 37-0581

Caltrans now has a web site! To get to the web site, go to: http://www.dot.ca.gov

REGISTERED GEOLOGIST M. RICHARDS No. 5240 Exp. 7-31-00 STATE OF CALIFORNIA

To accompany plans dated 3-5-01

NOTE: Blows per foot were made using a 28 lb. hand hammer with a 12 inch free fall

B.M.
R.R. SPIKE IN PWR. POLE
90' LT. 344+00
ELEV. 8.19

CLASSIFICATION OF MATERIAL BASED ON STANDARD GRADE SIZE LIMITS

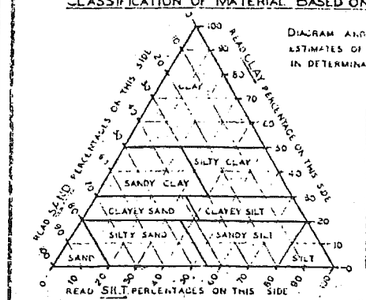

DIAGRAM AND TABLE SHOWING THE BASIS FOR ESTIMATES OF GRADE SIZE DISTRIBUTION USED IN DETERMINATION OF CLASS NAMES.

GRAPHIC USED IN TRIANGULAR CLASSIFICATION			
CLASS NAME	PERCENTAGE OF SIZES PRESENT		
	SAND	SILT	CLAY
SAND	80 - 100	0-20	0-20
SILTY SAND	45 - 80	0-55	0-20
SANDY SILT	0 - 45	55-80	0-20
SILT	0 - 20	80-100	0-20
CLAYEY SAND	45 - 80	0-42	20-55
CLAYEY SILT	0 - 38	42-80	20-55
SANDY CLAY	45 - 70	0-40	55-55
SILTY CLAY	0 - 30	40-70	55-55
CLAY	0 - 30	0-30	55-100

IF GRAVEL IS PRESENT IN APPRECIABLE AMOUNTS THE TERM "GRAVELLY" MAY BE ADDED TO THE CLASS NAME, VIS. "GRAVELLY SAND". THE TERMS "COARSE," "MEDIUM" AND "FINE" WHEN USED TO DESCRIBE GRAVEL, SAND AND SILT REFER TO STANDARD GRADE SIZE LIMITS

LEGEND OF BORING OPERATIONS

- Hand Auger Boring
- 1" Sampler Boring
- Rotary Wash Boring
- 1" Closed Sampler Driven
- Core Boring
- 2½" Penetrometer Driven
- 1⅜" Sampler Boring
- 2"105" Auger Boring
- 0 1020" Auger Boring
- Casing Driven
- Jet Boring
- Sample Taken
- 1⅜" A-Rod Driven
- 2¼" Cone Penetrometer

THE APPROPRIATE BORING SYMBOLS DESIGNATING THE METHOD OF OPERATION ARE SHOWN AT THE UPPER RIGHT-HAND CORNER OF THE RESPECTIVE BORING. WHERE TOOL CHANGES WERE MADE DURING THE BORING OPERATION SYMBOLS ARE SHOWN AT THE POINT OF CHANGE.

LEGEND OF EARTH MATERIALS

- Gravel
- Sand - S
- Silt - St
- Clay - C
- Silty Sand - S St
- Clayey Sand - C S
- Sandy Silt - S St
- Clayey Silt - C St
- Sandy Clay - SC
- Sandy Clay - S C
- Fill Material

ABBREVIATIONS

- Elevation of Ground at Test Hole
- bpf Blows Per Foot - Steel Note Above
- P Pushed Pipe
- M Moisture as % Dry Weight
- Elevation of Ground Water and Date

NOTES

THE CONTRACTOR'S ATTENTION IS DIRECTED TO SECTION 2, ARTICLE (k) OF THE STANDARD SPECIFICATIONS AND TO THE SPECIAL PROVISIONS ACCOMPANYING THIS SET OF PLANS.

CLASSIFICATION OF EARTH MATERIAL AS SHOWN ON THIS SHEET IS BASED UPON FIELD INSPECTION AND IS NOT TO BE CONSTRUED TO IMPLY MECHANICAL ANALYSIS.

AS BUILT
R. Colley
CONTRACT NO. 53-97623
DATE 5-7-59

BRIDGE ACROSS PENETENCIA CREEK
LOG OF TEST BORINGS

SHEET	OF	SCALE	FILE
33	34	HORZ. 1" = 10' VERT. 1" = 5'	
		BRIDGE NO. 37-112 R/L	DRAWING NO. C-2991-6

br370581*07of08.tif

ABBREVIATIONS

BC	BEGINNING OF CURVE
℄	CENTER LINE
EC	END OF CURVE
EL	ELEVATION
EXIST	EXISTING
F/C	FACE OF CURB
GB	GRADE BREAK
PSUE	PUBLIC SERVICE UTILITY EASEMENT
PVI	POINT OF VERTICAL INTERSECTION
R/W	RIGHT OF WAY

NOTE:
CONTRACTOR SHALL OBTAIN A COPY OF SANTA CLARA VALLEY WATER DISTRICT PERMIT FROM THE OWNER.

CALIFORNIA LANDING

PLANS FOR THE

IMPROVEMENT OF CALIFORNIA CIRCLE AND MILMONT DRIVE BRIDGE

DECEMBER 1988

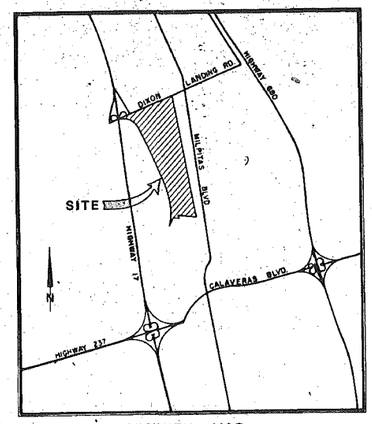

VICINITY MAP
N.T.S.

LEGEND

	EXISTING	PROPOSED
BARRICADE		
CENTERLINE		
CONTOUR LINE	9	10
DRAINAGE SWALE		
EASEMENT		
ELECTROLIER		
CURB AND GUTTER		
MANHOLE		
RIGHT OF WAY		
TELEPHONE LINE		
TELEPHONE POLE		
WATER LINE		W
FIRE HYDRANT		

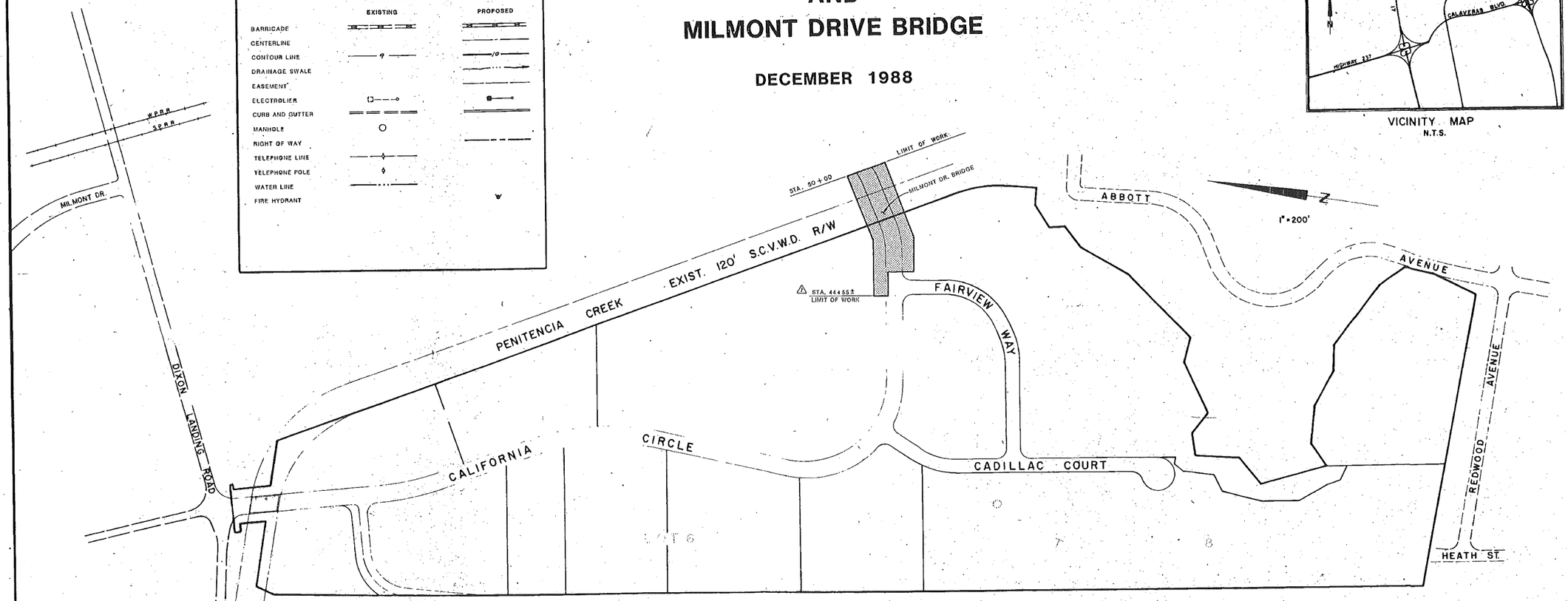

BENCHMARK
USC&GS BENCHMARK "COYOTE" AT WEST END OF NORTH WALL OF HIGHWAY BRIDGE AT DIXON LANDING ROAD AND HIGHWAY 17 IN MILPITAS, CA. (NOLTE RM 227) ELEV 30.91

BASIS OF BEARINGS
THE MONUMENT LINE OF DIXON LANDING ROAD (S67 53 12W) AS SHOWN UPON THE PARCEL MAP RECORDED IN BOOK 508 OF MAPS AT PAGES 38, 39, & 40 RECORDS OF SANTA CLARA COUNTY, WAS TAKEN AS THE BASIS OF BEARINGS FOR THESE PLANS

David M. McNeely
RECOMMENDED FOR APPROVAL DAVID M. MCNEELY

APPROVED BY CITY COUNCIL ACTION
MINUTES DATED 21 NOV., 1989

THE FIRM OF REIMER ASSOCIATES ASSUMES NO RESPONSIBILITY BEYOND THE ADEQUACY OF ITS DESIGN HEREIN. CONTRACTOR AGREES THAT HE SHALL ASSUME SOLE AND COMPLETE RESPONSIBILITY FOR THE JOB SITE CONDITIONS, ETC. THE CONTRACTOR SHALL COMPLY WITH THE RULES AND REGULATIONS OF THE STATE CONSTRUCTION SAFETY ORDERS.

SUBMITTED BY:
Ralph J. Nofield Exp 3/31/93
RALPH J. NOFIELD R.C.E. 13508

SHEET INDEX

1. COVER SHEET
2. GRADING PLAN AND PROFILE
3. PLAN, ELEVATION AND GENERAL NOTES
4. FOUNDATION PLAN AND PILE DETAILS
5. ABUTMENT PLAN, ELEVATION AND SECTION
6. GIRDER DETAILS AND INTERMEDIATE DIAPHRAGM
7. END DIAPHRAGM, APPROACH SLAB AND WINGWALL DETAILS
8. TYPICAL SECTION AND RAILING DETAILS
9. WATERLINE SECTIONS AND DETAILS
10. BORING LOG AND MISC. DETAILS
11. TECHNICAL SPECIFICATIONS
12. DELETED
13. CALIFORNIA CIRCLE & MILMONT DRIVE - STA. 45+50 TO STA. 50+00
14. CALIFORNIA CIRCLE & MILMONT DRIVE - STA. 45+50 TO STA. 50+00 BRIDGE IMPROVEMENTS
15. CALIFORNIA CIRCLE & MILMONT DRIVE - STA. 45+50 TO STA. 50+00 SIGNING AND STRIPING PLAN

AS-BUILT DRAWINGS
INSPECTED BY:
STORM D. N/A WATER HMKeyes
SEWER N/A GAS ETC. HMH Engrs
AS BUILTS: W. HHE DATE 4/1/91 REVIEWED: RPT DATE 4/1/91

DATE: DEC. 1988				
SCALE: AS SHOWN				
DESIGNED: KLS				
DRAWN: LSA, AR				
CHECKED:	2		3/20/89	ADDED NOTE
PROJ. ENGR.: RJN	1		2/13/89	LIMIT OF WORK STA.
		BY	DATE	REVISIONS

APPROVED
BY: _____
DATE _____ R.C.E. _____
APPROVED
BY: _____
DATE _____ R.C.E. _____

Reimer Associates
CIVIL / ENVIRONMENTAL SYSTEMS ENGINEERS • URBAN PLANNERS
1833 Old Bayshore Highway • Burlingame, California 94010 • (415) 692-1830

IMPROVEMENT PLANS

MILPITAS CALIFORNIA

SANTA CLARA_CA Work Maps
SANTA CLARA_CA0852

SHEET 1 OF 15 SHEETS
JOB NO. R-958

AS-BUILT 2-755

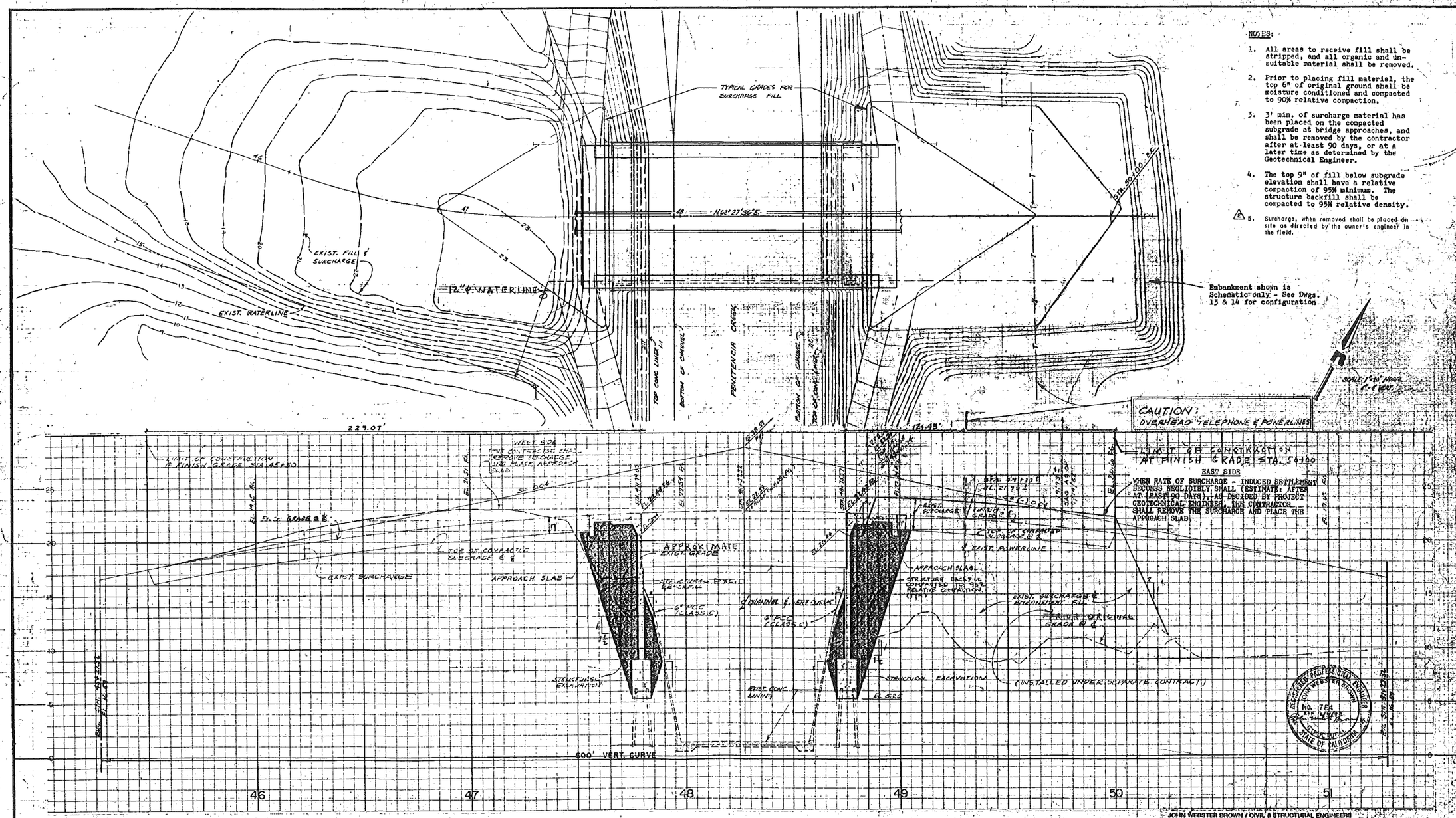

DATE: 8/13/86			
SCALE: AS SHOWN			
DESIGNED: JWB, LCG, RPM			
DRAWN: RPM			
CHECKED: JWB	2	01/28/86	NOTES
PROJ. ENGR. JWB	1	11/5/85	68' WIDTH
		BY DATE	REVISIONS

APPROVED
BY:
DATE: R.C.E.

APPROVED
BY:
DATE: R.C.E.

Relmer Associates
URBAN / ENVIRONMENTAL SYSTEMS ENGINEERS
120 Burlingame Office Center, 1933 Old Bayshore Highway
Burlingame, California 94010 (415) 692-1930

GRADING PLAN AND PROFILE

IMPROVEMENT PLANS
MILPITAS CALIFORNIA

SANTA CLARA CA Work Maps
SANTA CLARA_CA0853

SHEET 2 OF 18 SHEETS
JOB NO. R-958

2-755

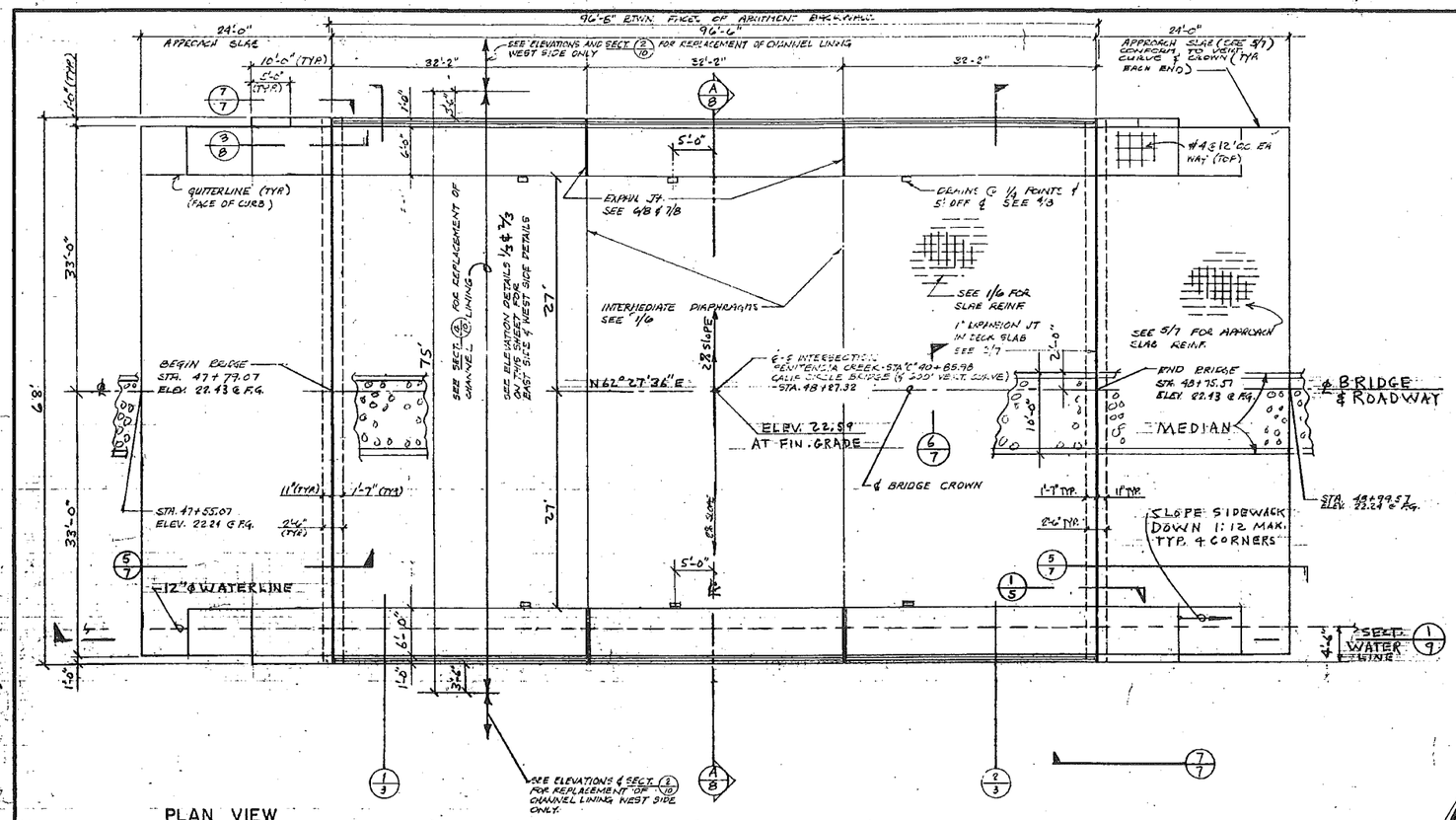

PLAN VIEW

SCALE: 1/8" = 1'-0"

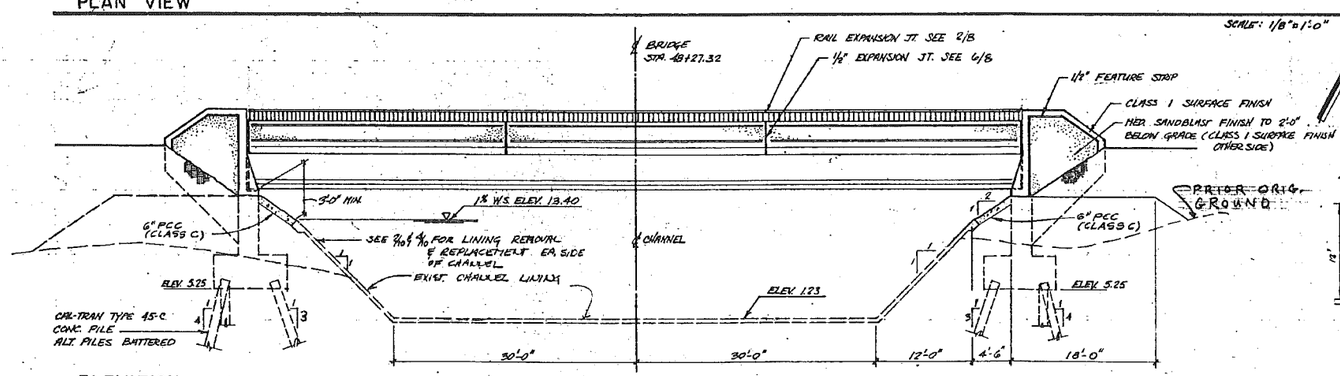

ELEVATION

SCALE: 1/8" = 1'-0"

GENERAL NOTES

1. DESIGN SPECIFICATIONS: AASHTO Standard Specifications for Highway Bridges, 1977, 1980 and 1981 Interim Specifications, and (1983) Thirteenth Edition.
2. CONSTRUCTION SPECIFICATIONS: State of California Business and Transportation Agency, Department of Transportation "Standard Specifications, January 1981"; and Standard Plans, January 1981 as applicable, except as noted otherwise on the drawings or within the Contract Documents.
3. DESIGN DEAD LOAD: 15 lbs per sq. ft. of roadway is included for future wearing surface.
4. DESIGN LIVE LOAD: HS20-44
5. EARTHQUAKE LOAD: Based on maximum expected acceleration at bedrock of 0.5g.; Combined Response Coefficient, C=0.12
6. PRECAST PRESTRESSED CONCRETE: See Girder Details sheet.
7. CAST-IN-PLACE CONCRETE: Cast-in-Place concrete except abutments and pile caps, shall be Class D concrete with "Type II Modified" Portland Cement with a minimum compressive strength of 4000 psi @ 28 days. Cast-in-Place concrete for abutments and pile caps shall be Class A concrete with "Type V" Portland Cement and a minimum compressive strength of 3000 psi @ 28 days. All exposed edges shall be chamfered 3/4" except as noted. All cast-in-place concrete shall have 4 to 5½% air-entraining.
8. REINFORCING STEEL: Reinforcing steel shall conform to ASTM A-615, Grade 60. Reinforcing steel covering shall be 2" clear except as noted.
9. PILES: See Foundation Plan and Pile Details sheet.
10. SPECIAL FINISHES: Handrails and wing walls are to receive a medium sand blast treatment. Form-tie holes in sandblast surface finish areas to be in a uniform pattern and plugged ±½ from surface. In sandblasting Contractor shall take care to avoid the plugged Form-tie holes.
11. SIDEWALKS, CURBS & RAILS: Shall not be placed until deck slab has attained its design strength.
12. DECK PLACING: The Contractor shall submit a deck placing schedule which will be subject to the approval of the Engineer. The intermediate and end diaphragms shall be placed 5 days before the deck. If the entire deck is not placed in one operation and unless shown otherwise on the plans, the following conditions shall be provided for:
    a. Transverse joints shall be located at about the ¼ point of span, and the portion over the supports placed last.
    b. Longitudinal joints shall be located at the edge of a traffic lane.
    c. A separate closure pour at least two feet wide, will be required where a longitudinal joint is used. The closure shall not be placed until three days after the adjacent decks.
    d. Reinforcing steel shall be continuous through all construction joints.
13. Concrete inserts shall be a manufactured by Superior Concrete Accessories Inc. or equal.

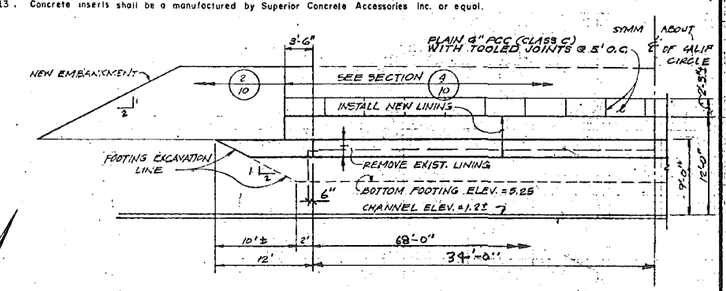

2/3 EAST SIDE

SCALE: 1/8" = 1'-0"

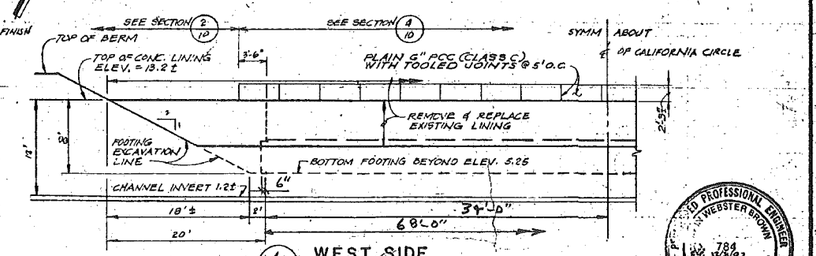

1/3 WEST SIDE

SCALE: 1/8" = 1'-0"

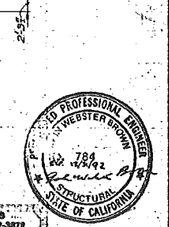

JOHN WEBSTER BROWN / CIVIL & STRUCTURAL ENGINEERS
1134 Terminal Way - Suite 108 / Reno, Nevada 89502 / (702) 322-3878

DATE: 8/13/86				
SCALE: AS SHOWN				
DESIGNED: JWB/DG/RPF				
DRAWN: RPF				
CHECKED: JWB				
PROJ. ENGR. JWB	1	JWB	11/5/86	68' WIDTH
		BY	DATE	REVISIONS:

APPROVED
BY:
DATE: R.C.E.
APPROVED
BY:
DATE: R.C.E.

Reimer Associates
URBAN / ENVIRONMENTAL SYSTEMS ENGINEERS
120 Burlingame Office Center • 1633 Old Bayshore Highway
Burlingame, California • 94010 • (415) 692-1830

PLAN, ELEVATION & GENERAL NOTES

IMPROVEMENT PLANS

MILPITAS, CALIFORNIA

SANTA CLARA_CA Work Maps
SANTA CLARA_CA0854

SHEET 3 OF 20 SHEETS
JOB NO. R-958

AS-BUILT 2-7-95 JWB 1-25-95

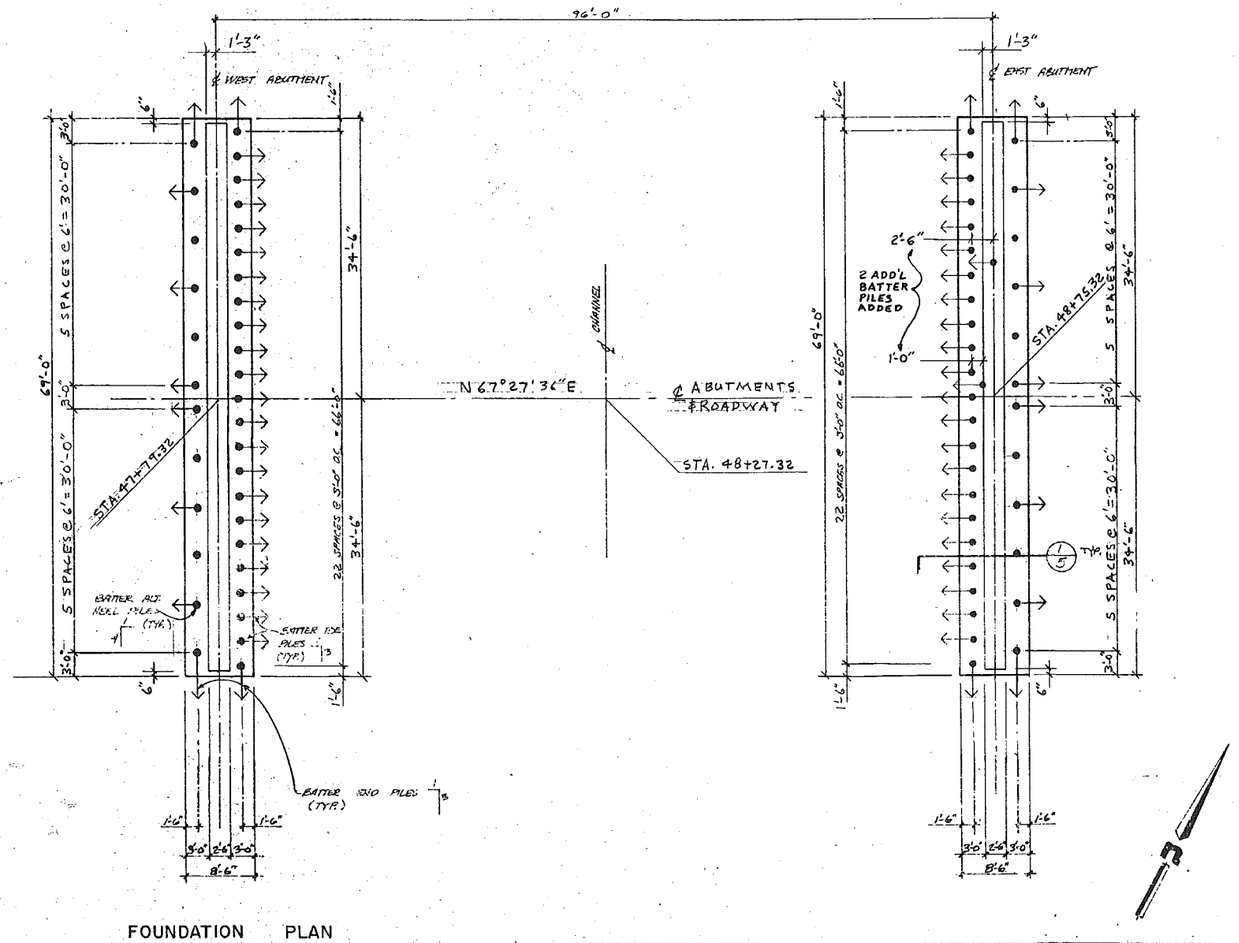

FOUNDATION PLAN

SCALE: 1/8" = 1'-0"

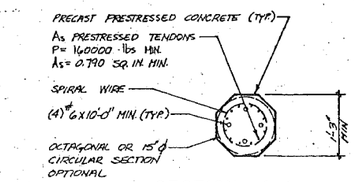

SECTION A-1

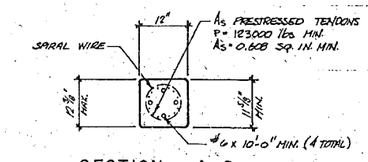

SECTION A-2

NOTES:

Design Loading = 45 Tons (Caltrans Class 45C May 14, 1982)

Design Pile Length = 55 Feet

Pile reinforcement extending into a footing shall be hooked as required to provide clearance to top of footing. Details for pile extensions shall be submitted to the Engineer for approval prior to construction.

Lapped splices in spiral pile reinforcement shall be lapped 80 wire diameters minimum. Spiral pile reinforcement at splices and at ends shall be terminated by a 135° hook with 6" tail hooked around a longitudinal bar or strand.

All concrete in piles and pile extensions shall contain not less than 8 sacks of cement per cubic yard.

P = Prestressing Force @ anchorage — If section used is larger than the min. section shown, then "P" shall provide 860 psi min.

As = Minimum area of prestressing steel required.

Concrete Strength: f'_c @ 28 days = 6,000 psi (SECTION A-2)
5,000 psi (SECTION A-1)
f'_{ci} @ transfer 4,000 psi

To facilitate pile installation, predrilling to a maximum depth of 10 feet may be employed, providing the auger is no larger than 8 inches in diameter.

All pile driving shall be inspected by a representative of the Soils Engineer and in no case should a pile be overdriven regardless of depth penetration. Once positioned for driving, the pile should be advanced continuously until reaching design depth or until refusal. Refusal is defined by driving resistance equal to ten (10) blows per inch for three (3) inches of driving or achievement of twenty (20) blows per inch. A reasonable weight hammer developing adequate driving energy should be used. As a guide, we suggest that a hammer weighing at least 3,000 pounds, delivering 12,000 or more foot pounds of driving energy be selected.

All details of proposed pile layout and pile driving particulars shall be reviewed by the Soils Engineer.

All piling shall conform to Caltrans Standard Specifications, January, 1981, Section 49, except as modified above.

Refer to Boring Log Drawing herein.

All batter piles shall be driven utilizing equipment with leads to facilitate accuracy of alignment.

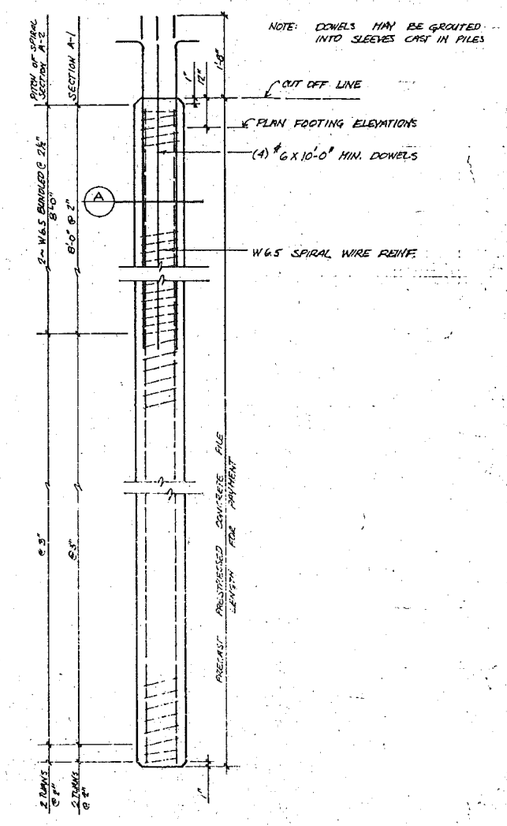

PILE DETAILS

N.T.S.

JOHN WEBSTER BROWN / CIVIL & STRUCTURAL ENGINEERS
1135 Terminal Way — Suite 108 / Reno, Nevada 89502 / (702) 322-3878

REGISTERED PROFESSIONAL ENGINEER JOHN WEBSTER BROWN No. 784 STRUCTURAL STATE OF CALIFORNIA

DATE: 8/13/86				
SCALE: AS SHOWN				
DESIGNED: JWB, CCG, RPF				
DRAWN: RPF				
CHECKED: JWB				
PROJ. ENGR. JWB	1	JWB	11/6/89	68' WIDTH
		BY	DATE	REVISIONS

APPROVED
BY: _____
DATE: _____ R.C.E. _____

APPROVED
BY: _____
DATE: _____ R.C.E. _____

Reimer Associates
URBAN / ENVIRONMENTAL SYSTEMS ENGINEERS
120 Burlingame Office Center • 1633 Old Bayshore Highway
Burlingame, California • 94010 • (415) 592-1830

FOUNDATION PLAN AND PILE DETAILS

IMPROVEMENT PLANS

MILPITAS CALIFORNIA

SANTA CLARA_CA Work Maps
SANTA CLARA_CA0855

SHEET 4 OF 15 SHEETS
JOB NO. R-958

AS-BUILT 2-755

JWB 1855 R98

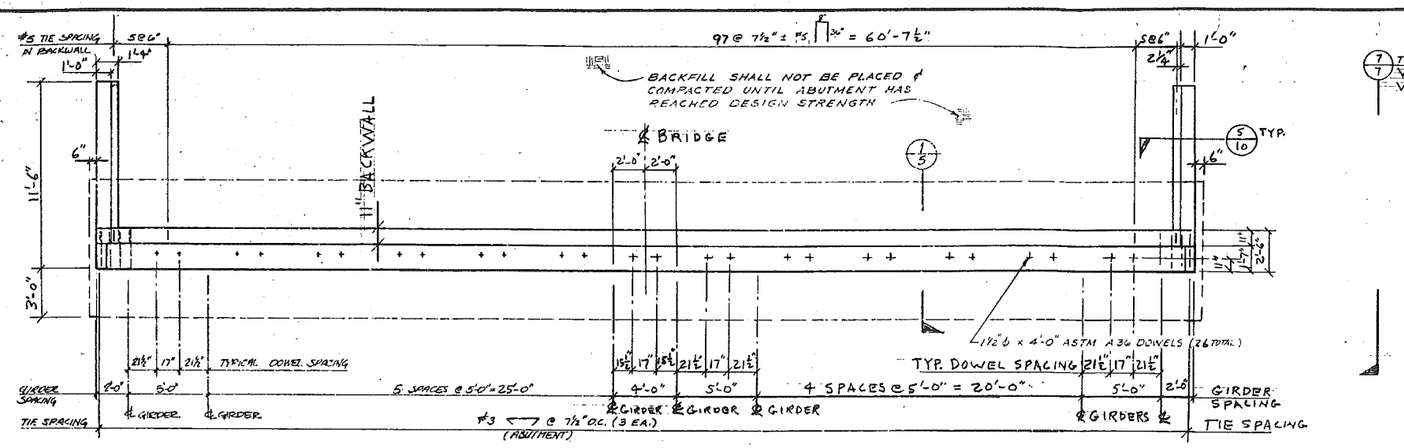

ABUTMENT PLAN VIEW - (EAST ABUTMENT SHOWN, WEST ABUTMENT OPPOSITE)

SCALE: 1/4" = 1'-0"

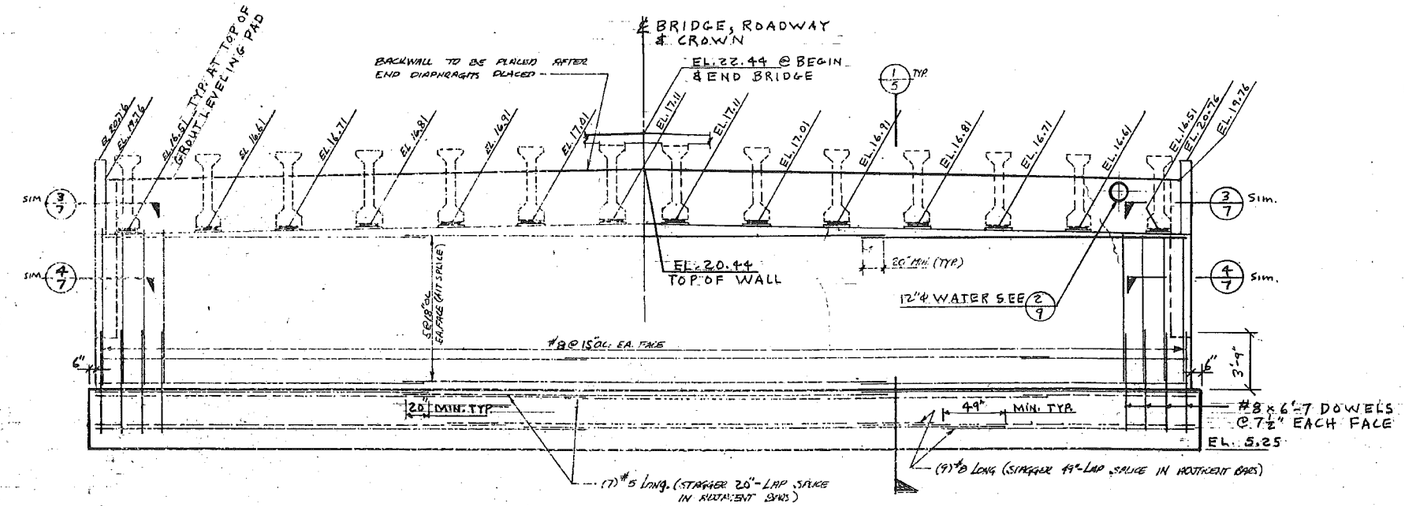

NOTE: ELEVATIONS ARE TOP OF GROUT LEVELING PAD

ABUTMENT ELEVATION (EAST ABUTMENT SHOWN, WEST ABUTMENT OPPOSITE)

SCALE: 1/4" = 1'-0"

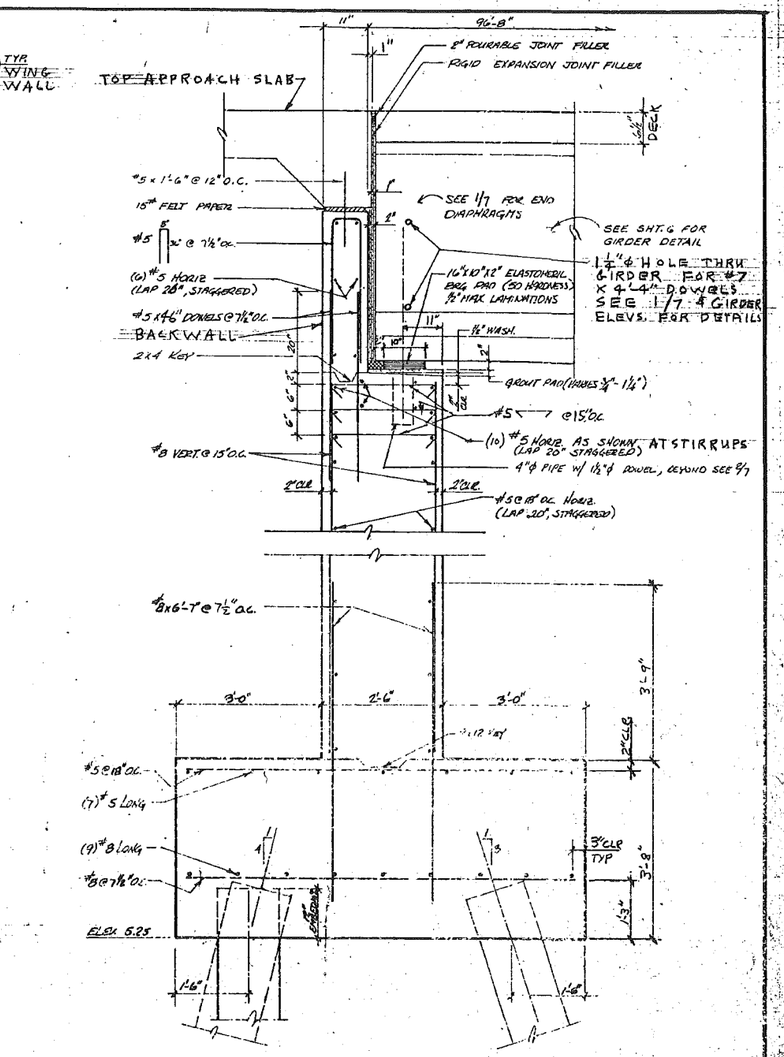

TYPICAL SECTION

SCALE: 3/4" = 1'-0"

REGISTERED PROFESSIONAL ENGINEER JOHN WEBSTER BROWN No. 784 STRUCTURAL STATE OF CALIFORNIA

JOHN WEBSTER BROWN / CIVIL & STRUCTURAL ENGINEER
1136 Terminal Way • Suite 104 / Reno, Nevada 89502 • (702) 322-3878

DATE: 8/13/86				
SCALE: AS SHOWN				
DESIGNED: JWB, CCG, RPF				
DRAWN: RPF				
CHECKED: JWB				
PROJ. ENGR. JWB	1	JWB	11/3/87	68' WIDTH
		BY	DATE	REVISIONS

APPROVED
BY: _____
DATE: _____ R.C.E. _____

APPROVED
BY: _____
DATE: _____ R.C.E. _____

Reimer Associates
URBAN / ENVIRONMENTAL SYSTEMS ENGINEERS
120 Burlingame Office Center • 1633 Old Bayshore Highway
Burlingame, California • 94010 • (415) 692-1830

ABUTMENT PLAN, ELEVATION AND SECTION

IMPROVEMENT PLANS

MILPITAS CALIFORNIA

SANTA CLARA_CA Work Maps
SANTA CLARA_CA0856

SHEET 5 OF 13 SHEETS
JOB NO. R-958

AS-BUILT 2-755

JWB 1685 R-98

AS-BUILT

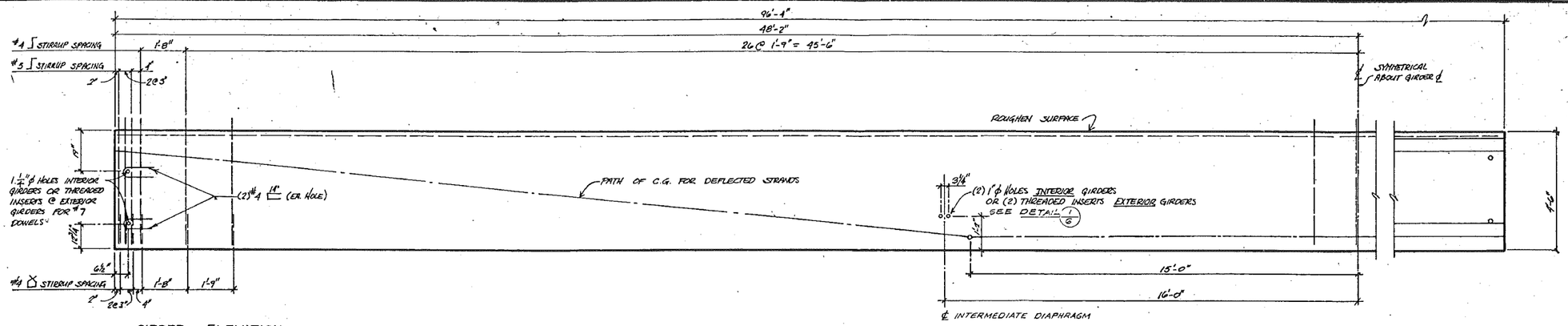

GIRDER ELEVATION

SCALE: 1/2" = 1'-0"

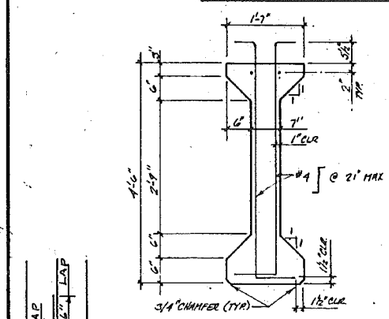

TYP. REINF. AT CENTER

SCALE: 3/4" = 1'-0"

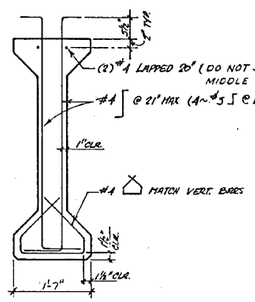

TYP. REINF. AT ENDS

SCALE: 3/4" = 1'-0"

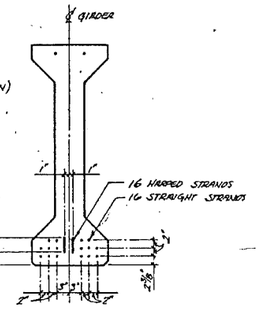

STRAND PATTERN AT CENTER

SCALE: 3/4" = 1'-0"

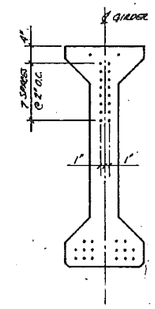

STRAND PATTERN AT ENDS

SCALE: 3/4" = 1'-0"

PRECAST PRESTRESSED CONCRETE GIRDERS

1. CONCRETE: The minimum compressive strength at 28 days shall be 6000 psi. The minimum compressive strength of concrete at the transfer of prestress shall be 5000 psi. Concrete shall be Class D concrete with type II modified Portland Cement. The design mix shall be submitted for approval to the Engineer.

2. PRETENSIONING STEEL: Pretensioning steel shall consist of high tensile strength, 1/2" diameter, As=0.153in² 7-wire strand conforming to ASTM A-416, Grade 270K.

3. REINFORCING STEEL: Reinforcing steel shall conform to ASTM A-615, Grade 60.

4. PRETENSIONING FORCE: The total initial prestress force, after elastic shorting, but before time dependent effects shall be 878 kips (fsi = 179 ksi). The design assumes a total loss of prestress of 50 ksi, including elastic shortening. Initial tensioning force = 969 kips. Final effective prestress = 724 kips. At transfer of prestress the sequence of release shall be (a) the deflected strands, (b) the hold down devices, and (c) the straight strands. Release of strands shall be in a sequence such that transverse eccentric moments will not overstress concrete. Any alternate procedure shall be submitted for the approval of the Engineer.

5. CAMBER: Prior to setting deck slab forms (see Camber Diagram) the Contractor shall submit to the Engineer the following information for each girder:
   1) Marking for each girder and time of casting.
   2) Camber immediately after release at precasting yard and age at release.
   3) After Erection: Location, elevations of ends and center of span; and age when measurements were taken.

6. HANDLING PRESTRESSED CONCRETE BEAMS: The beams shall be maintained in an upright position and shall be lifted by suitable devices provided at the ends of the beams. The use of holes for lifting purposes will not be permitted. Erection hardware and reinforcement is the responsibility of the manufacturer.

7. CURING: Concrete shall be steam cured.

8. FINISH: Girders shall be placed in steel side and bottom forms, and the top shall be sand blasted. Strands shall be cut flush with ends and painted with thick coat of zinc rich paint or as approved by the Engineer.

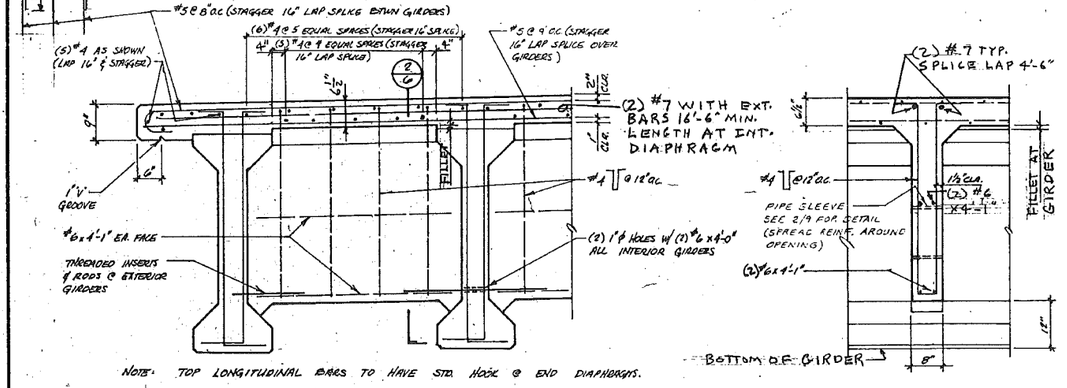

1/6 INTERMEDIATE DIAPHRAGM & DECK SLAB REINFORCING

SCALE: 3/4" = 1'-0"

2/6 SECTION

SCALE: 3/4" = 1'-0"

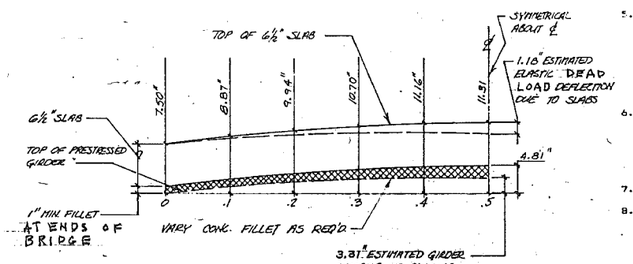

NOTE:

THE ABOVE ELEVATIONS FOR THE TOP OF SLAB ARE REFERENCED TO THE CONDITION PRIOR TO PLACING THE SLAB. THE EFFECTS OF SLAB WEIGHT AND LONG-TERM DEFLECTIONS ARE TAKEN INTO ACCOUNT IN THE ELEVATIONS.

CAMBER DIAGRAM

N.T.S.

REGISTERED PROFESSIONAL ENGINEER JOHN WEBSTER BROWN No. 784 Exp. 12/31/92 STRUCTURAL STATE OF CALIFORNIA

JOHN WEBSTER BROWN / CIVIL & STRUCTURAL ENGINEERS
1135 Terminal Way — Suite 108 / Reno, Nevada 89502 / (702) 322-3472

DATE: 8/13/86				
SCALE: AS SHOWN				
DESIGNED: JWB, COG, KAF				
DRAWN: RPF				
CHECKED: JWB				
PROJECT ENGR. JWB	1	JWB	11/5/87	68' WIDTH
		BY	DATE	REVISIONS

APPROVED BY _____ DATE: _____ R.C.E. _____

APPROVED BY _____ DATE: _____ R.C.E. _____

Reimer Associates
URBAN / ENVIRONMENTAL SYSTEMS ENGINEERS
120 Burlingame Office Center • 1653 Old Bayshore Highway
Burlingame, California • 94010 • (415) 692-1830

GIRDER DETAILS AND INTERMEDIATE DIAPHRAGM

IMPROVEMENT PLANS

MILPITAS CALIFORNIA

SANTA CLARA_CA Work Maps
SANTA CLARA_CA0857

SHEET 6 OF 16 SHEETS

JOB NO. R-958

AS-BUILT 2-755

JWB 1855 R 80

AS-BUILT

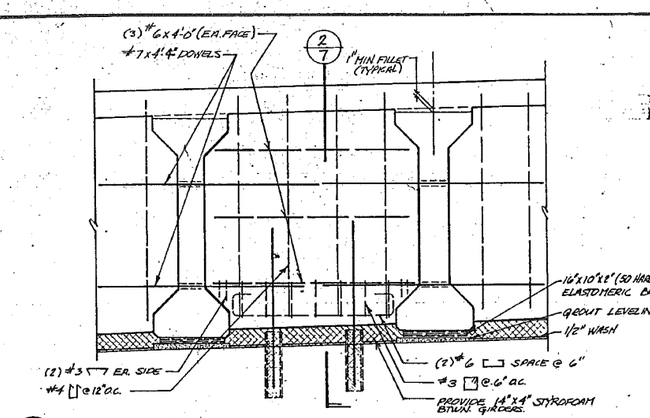

1/7 END DIAPHRAGM

SCALE: 3/4" = 1'-0"

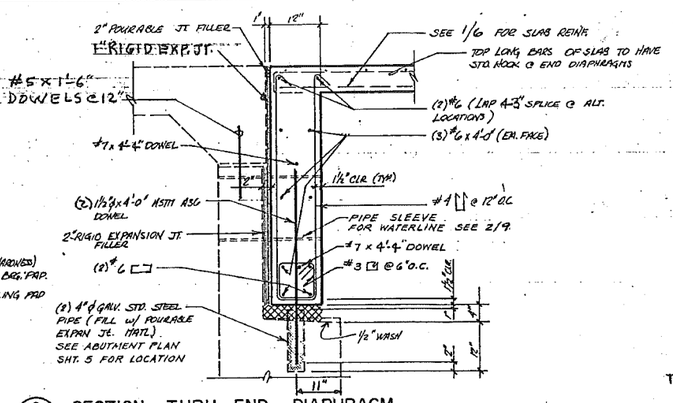

2/7 SECTION THRU END DIAPHRAGM

SCALE: 3/4" = 1'-0"

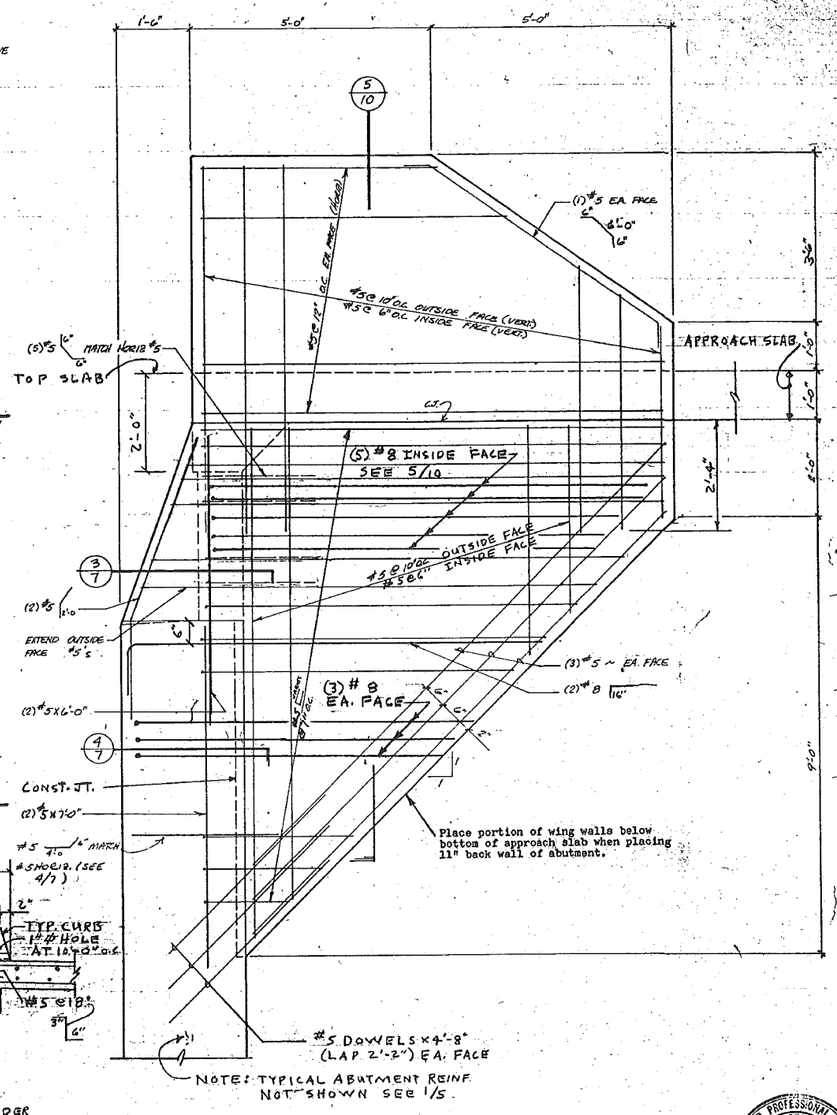

7/7 TYPICAL WINGWALL REINF.

SCALE: 3/4" = 1'-0"

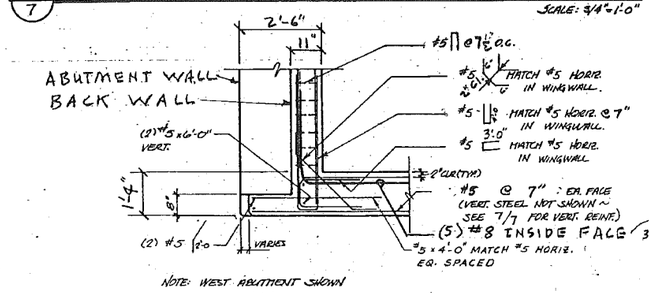

3/7 BACKWALL AT WINGWALL

SCALE: 1/2" = 1'-0"

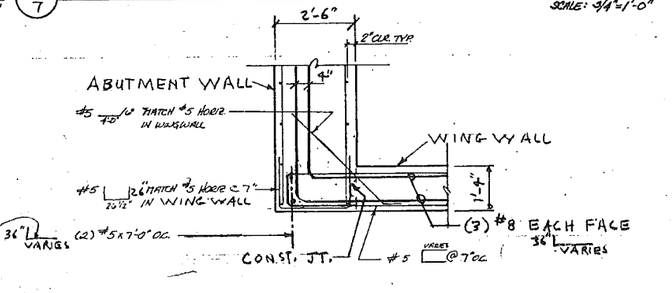

4/7 WINGWALL AT ABUTMENT

SCALE: 1/2" = 1'-0"

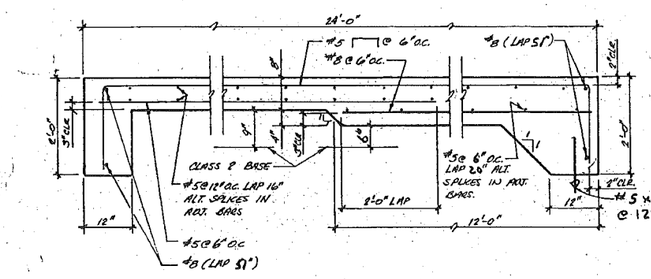

5/7 APPROACH SLAB

SCALE: 3/4" = 1'-0"

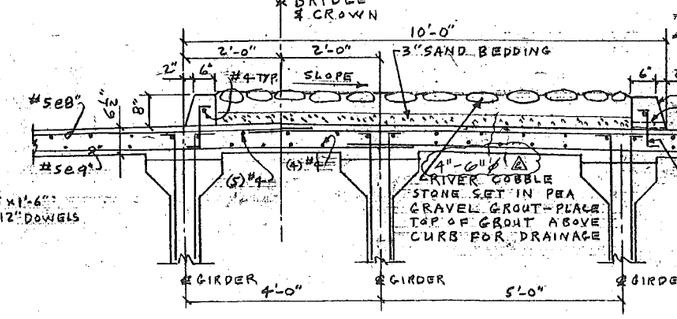

6/7 SECTION AT ℄ & RAISED MEDIAN

SCALE: 3/4" = 1'-0"

REGISTERED PROFESSIONAL ENGINEER JOHN WEBSTER BROWN No. 784 Exp. 12/31/92 STRUCTURAL STATE OF CALIFORNIA

JOHN WEBSTER BROWN / CIVIL & STRUCTURAL ENGINEERS
1135 Terminal Way — Suite 108 / Reno, Nevada 89502 / (702) 322-3812

DATE: 8/13/86				
SCALE: AS SHOWN				
DESIGNED: JWB, CCG, RJK				
DRAWN: R.P.F.				
CHECKED: JWB	4	RJS	9/24/87	PER CITY COMMENTS (8)
PROJ. ENGR.: JWB	1	JWB	1/5/84	68' WIDTH
		BY	DATE	REVISIONS

APPROVED BY _____ DATE _____ R.C.E. _____

APPROVED BY _____ DATE _____ R.C.E. _____

Reimer Associates
URBAN / ENVIRONMENTAL SYSTEMS ENGINEERS
120 Burlingame Office Center • 1633 Old Bayshore Highway
Burlingame, California • 94010 • (415) 692-1830

END DIAPHRAGM, APPROACH SLAB & WINGWALL DETAILS

IMPROVEMENT PLANS

MILPITAS CALIFORNIA

SANTA CLARA_CA Work Maps
SANTA CLARA_CA0858

SHEET 7 OF 16 SHEETS

JOB NO. R-958

AS-BUILT 2-755

JWB 1865 C28

AS-BUILT

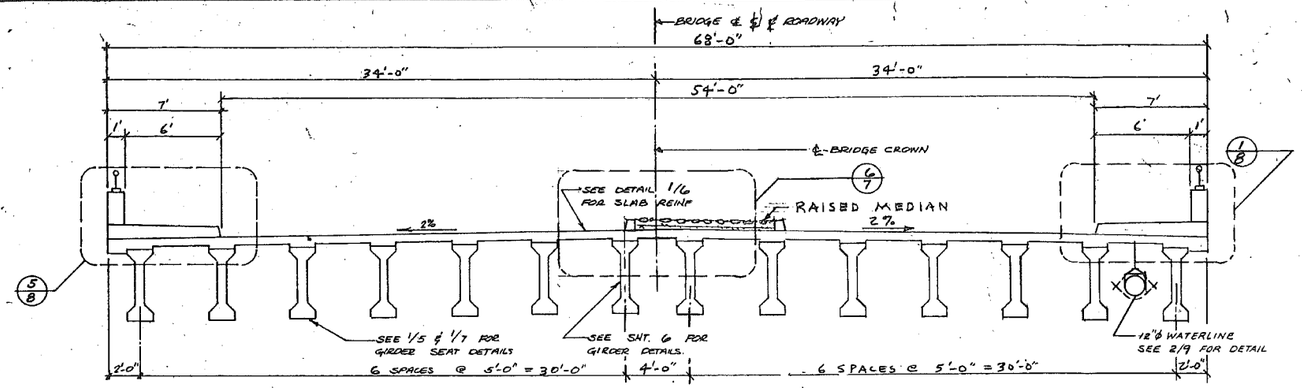

A/8 TYPICAL SECTION

SCALE: 1/4"=1'-0"

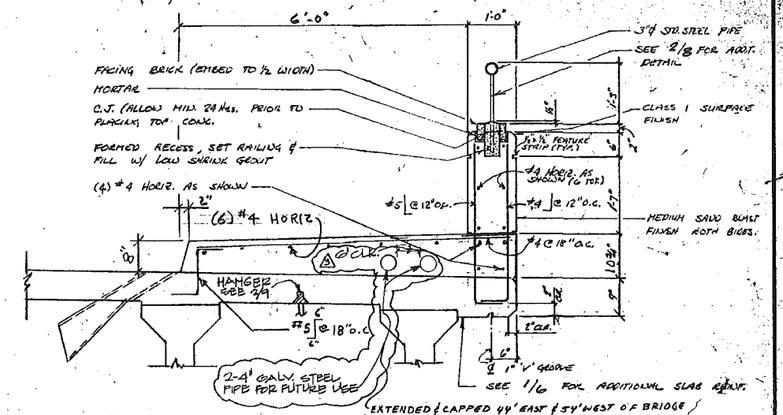

1/8 CURB & RAILING DETAIL

SCALE: 3/4"=1'-0"

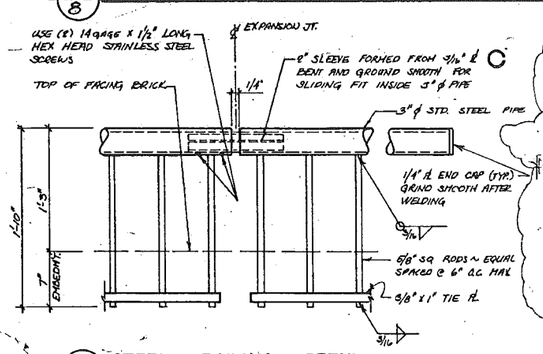

2/8 STEEL RAILING DETAIL

SCALE: 1½"=1'-0"

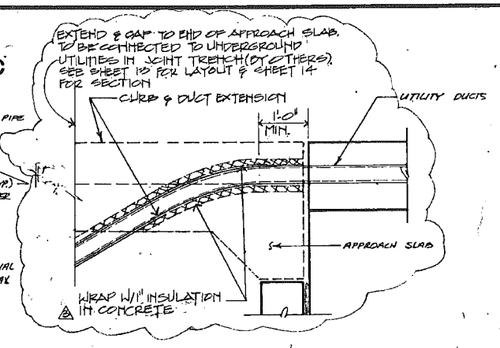

3/8 TYPICAL SECT. AT UTILITY DUCTS

SCALE: 3/4"=1'-0"

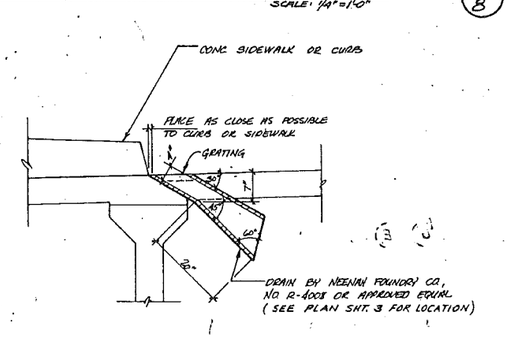

4/8 DETAIL

SCALE: 3/4"=1'-0"

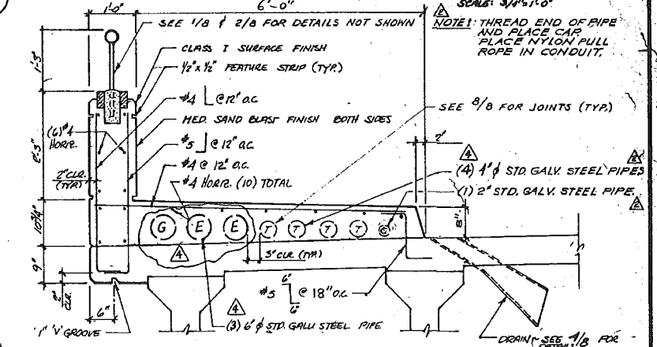

NOTE 1: THREAD END OF PIPE AND PLACE CAP. PLACE NYLON PULL ROPE IN CONDUIT.

5/8 SIDEWALK & RAILING REINF.

SCALE: 3/4"=1'-0"

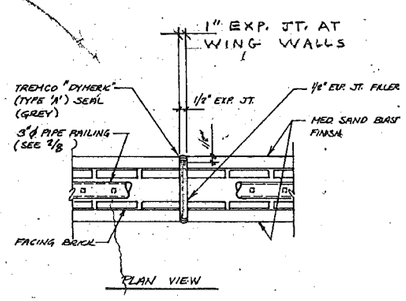

6/8 EXPAN. JT. AT CONC. RAILING

SCALE: 1"=1'-0"

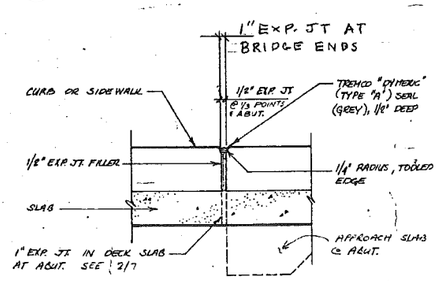

7/8 SECT. THRU EXPAN. JT. IN CURB OR SIDEWALK

SCALE: 1"=1'-0"

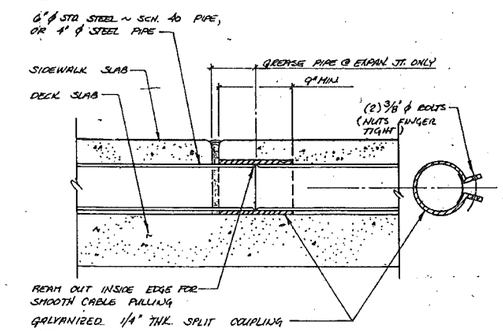

8/8 EXPAN. JT. FOR UTILITY PIPES

SCALE: 1½"=1'-0"

RAILING NOTES:

Steel for railing to be equivalent to ASTM des. A36.

Railing to be made up into panels, constructed and placed to bridge grade and alignment.

Abutting railing panels shall have sleeve unit as shown for expansion joints.

Railing shall be galvanized after fabrication.

Facing brick as approved by engineer.

REGISTERED PROFESSIONAL ENGINEER JOHN WEBSTER BROWN No. 784 EXP. 12/31/92 STRUCTURAL STATE OF CALIFORNIA

JOHN WEBSTER BROWN / CIVIL & STRUCTURAL ENGINEERS
1135 Terminal Way — Suite 108 / Reno, Nevada 89502 / (702) 322-8972

DATE: 5/15/86				
SCALE: AS SHOWN				
DESIGNED: JWB, CCS, RPF	4		12/5/89	PER PG & E
DRAWN: RPF	3		9/22/87	PER CITY COMMENTS (6)/(8)
CHECKED: JWB	2		6/17/87	SECTION 3 & SECTION 5 - UTILITIES
PROJ. ENGR. JWB	1	JWB	1/13/87	68' WIDTH
		BY	DATE	REVISIONS

APPROVED BY: _____ DATE: _____ R.C.E. _____

APPROVED BY: _____ DATE: _____ R.C.E. _____

Reimer Associates
URBAN / ENVIRONMENTAL SYSTEMS ENGINEERS
120 Burlingame Office Center • 1633 Old Bayshore Highway
Burlingame, California • 94010 • (415) 692-1830

TYPICAL SECTION AND RAILING DETAILS

IMPROVEMENT PLANS

MILPITAS CALIFORNIA

SANTA CLARA_CA Work Maps
SANTA CLARA_CA0859

SHEET 8 OF 15 SHEETS

JOB NO. R-958

AS-BUILT 2-755

JWB 1995 R10

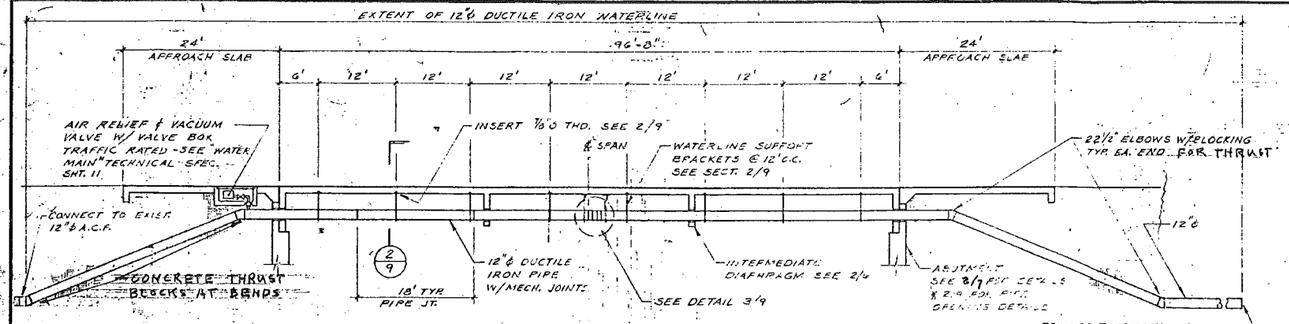

1/9 SECTION – WATERLINE PROFILE

SCALE: 1"=10'

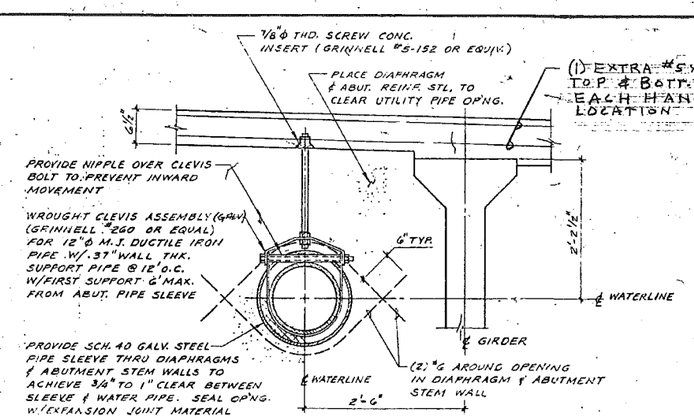

2/9 SECTION – WATERLINE PIPE HANGER

SCALE: 1"=1'-0"

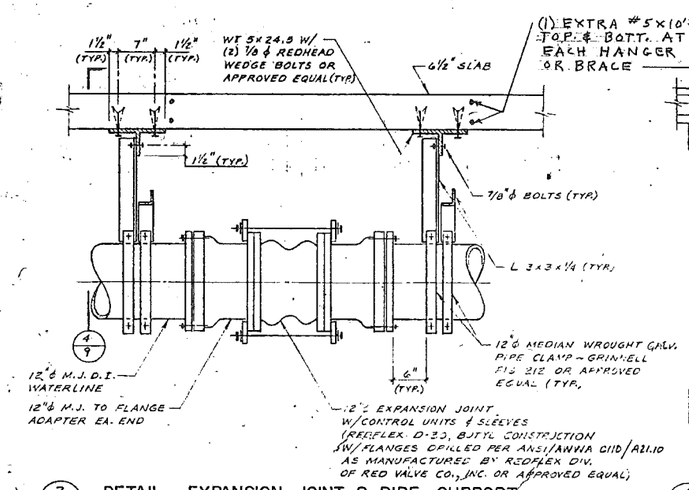

3/9 DETAIL – EXPANSION JOINT & PIPE SUPPORT

SCALE: 1"=1'-0"

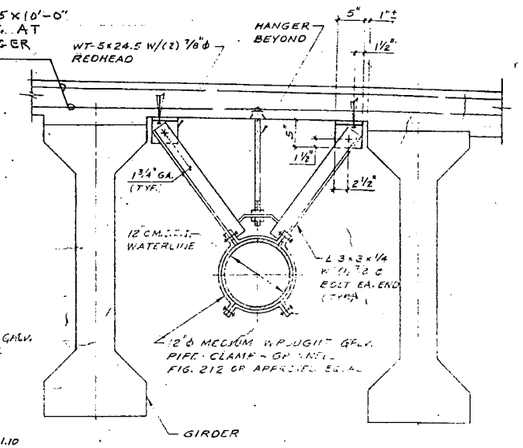

4/9 SECTION

SCALE: 1"=1'-0"

JOHN WEBSTER BROWN / CIVIL & STRUCTURAL ENGINEERS
1135 Terminal Way – Suite 109 / Reno, Nevada 89502 / (702) 322-3878

REGISTERED PROFESSIONAL ENGINEER JOHN WEBSTER BROWN No. 784 Exp. 12/31/92 STRUCTURAL STATE OF CALIFORNIA

DATE: 6/13/86			
SCALE: AS SHOWN			
DESIGNED: JWB, CCG, RH			
DRAWN: C.C.G.			
CHECKED: JWB			
PROJ. ENGR. JWB	JWB	11/3/86	68' WIDTH
	BY:	DATE	REVISIONS

APPROVED
BY: ____
DATE: ____ R.C.E. ____

APPROVED
BY: ____
DATE: ____ R.C.E. ____

Reimer Associates
URBAN / ENVIRONMENTAL SYSTEMS ENGINEERS
120 Burlingame Office Center • 1833 Old Bayshore Highway
Burlingame, California • 94010 • (415) 692-1830

WATERLINE SECTIONS & DETAILS
IMPROVEMENT PLANS
MILPITAS CALIFORNIA

SANTA CLARA CA Work Maps
SANTA CLARA CA0860

SHEET 9 OF 10 SHEETS
JOB NO. R-968

AS BUILT 2-755 JWB 1/25/88

RECEIVED

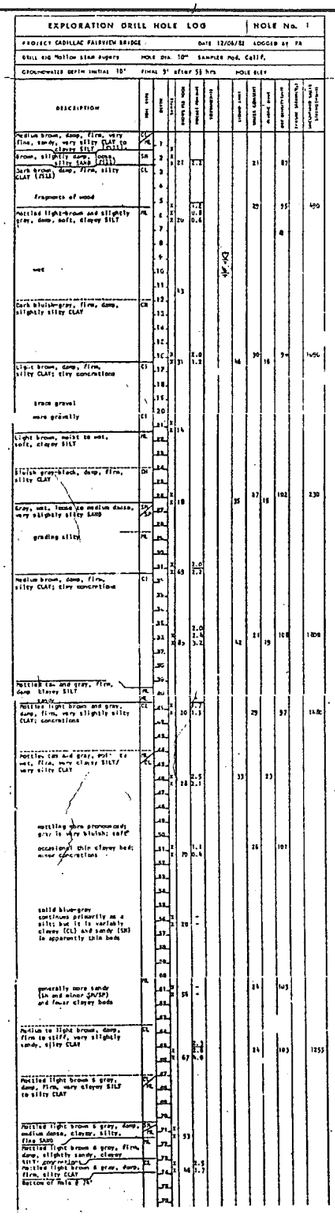

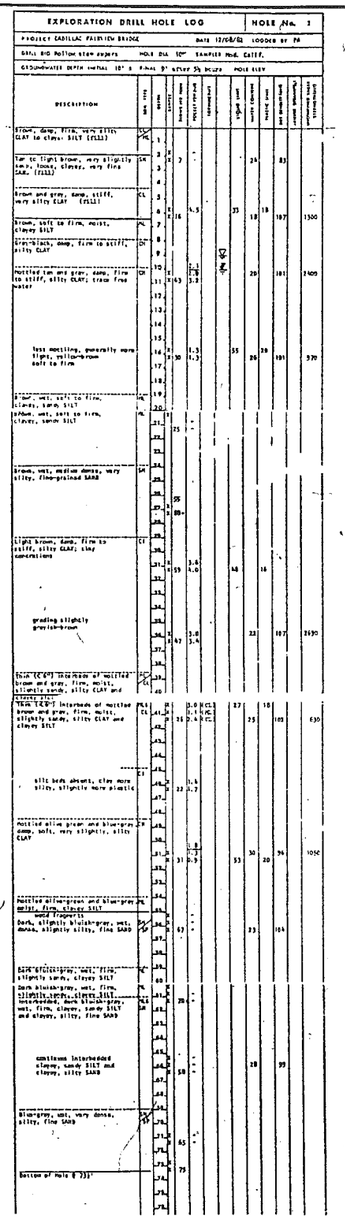

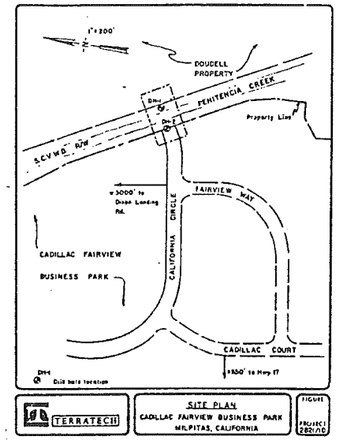

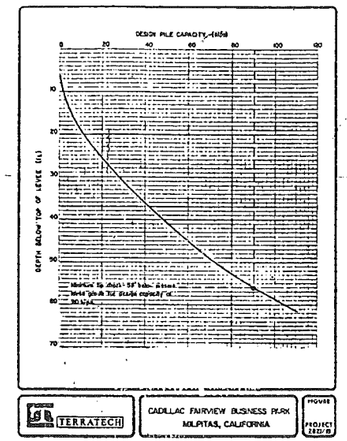

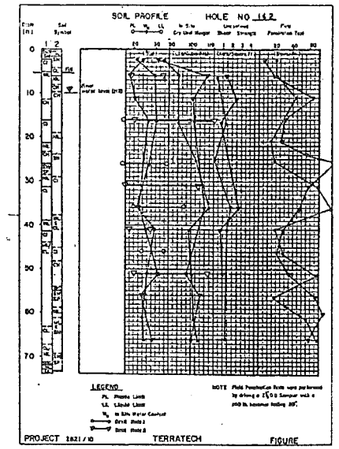

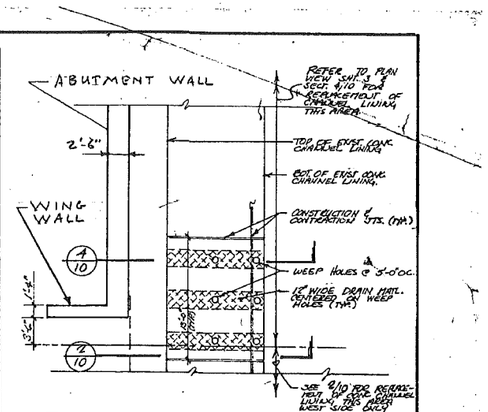

1/10 PLAN VIEW (Partial)-CHANNEL LINER

SCALE: 3/8" = 1'-0"

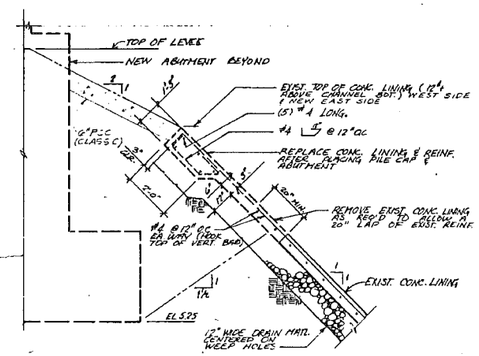

2/10 SECTION

SCALE: 3/8" = 1'-0"

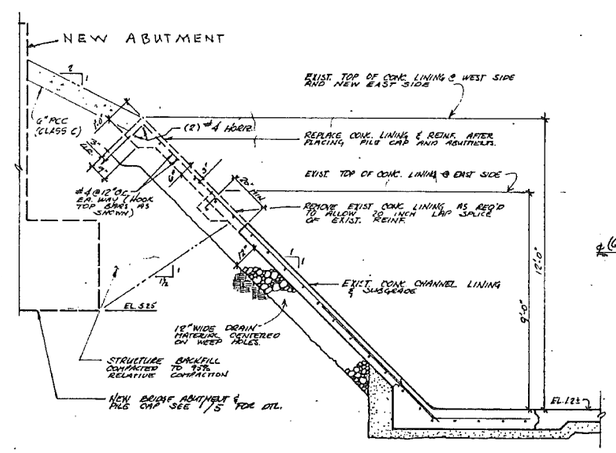

4/10 SECTION

SCALE: 3/8" = 1'-0"

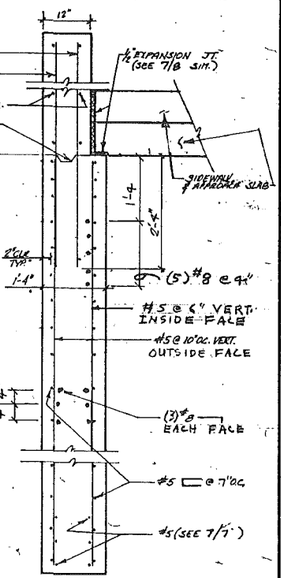

5/10 SECTION THRU WINGWALL

SCALE: 3/8" = 1'-0"

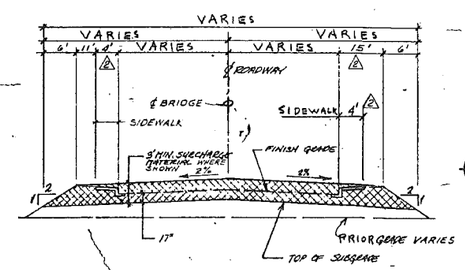

SURCHARGE DETAIL

3/10 TYPICAL SECTION - STA. 45+50 to 47+63.9 & STA. 48+90.7 to 50+00

N.T.S.

REGISTERED PROFESSIONAL ENGINEER JOHN WEBSTER BROWN No. 784 Exp. 12/31/82 STRUCTURAL STATE OF CALIFORNIA

JOHN WEBSTER BROWN / CIVIL & STRUCTURAL ENGINEERS
1135 Terminal Way — Suite 108 / Reno, Nevada 89502 / (702) 322-3878

DATE: 8/13/80				
SCALE: AS SHOWN				
DESIGNED: JWB, DCG, RPB				
DRAWN: RPB				
CHECKED: JWB	2		2/13/89	DIMENSIONS - SECTION 3
PROJ. ENGR. JWB	1	JWB	11/3/89	68' WIDTH
		BY	DATE	REVISIONS

APPROVED BY: _____ DATE: _____ R.C.E. _____

APPROVED BY: _____ DATE: _____ R.C.E. _____

Reimer Associates
URBAN / ENVIRONMENTAL SYSTEMS ENGINEERS
120 Burlingame Office Center • 1833 Old Bayshore Highway
Burlingame, California • 94010 • (415) 692-1830

BORING LOG & MISC. DETAILS

IMPROVEMENT PLANS

MILPITAS CALIFORNIA

SANTA CLARA_CA Work Maps
SANTA CLARA_CA0861

SHEET 10 OF 16 SHEETS

JOB NO. R-958

AS-BUILT 2-755 JWB 1855 R98

AS-BUILT

TECHNICAL SPECIFICATIONS

DESIGN SPECIFICATIONS: AASHTO "Standard Specifications for Highway Bridges.", 1977, 1980 and 1981 Interim Specifications, and (1983) Thirteenth Edition.

CONSTRUCTION SPECIFICATIONS: All work shall conform to the following Standard Specifications and Plans except wherein provisions of these Technical Specifications, the drawings, and/or the contract documents are shown otherwise.

1) "Standard Specifications," January 1981, and the "Standard Plans", January 1981, Department of Transportation, State of California Business and Transportation Agency.

2) City of Milpitas Standard Specifications.

3) "Standard Specifications for Highway Bridges", Thirteenth Edition, 1983, Adopted by the American Association of State Highway and Transportation Officials.

OFFICIAL COPY: The official copy of the plans is the duplicate original on file in the office of the City Engineer of Milpitas.

EXISTING CONDITIONS: All existing utilities and improvements that are now or may become damaged during construction shall be completely restored to the satisfaction of the City Engineer.

SCOPE OF WORK: Work to be done under this Contract include the following major items of work:

1) Clearing and grubbing
2) Structural excavation & removal of part of channel lining
3) Pile driving
4) Construct bridge structure as shown on the plans
5) Structural backfill behind abutments
6) Construction Dewatering
7) Placing Utilities As Shown
8) Placing channel lining
9) Removing surcharge and placing approach slab

Omitted Items: Any work or materials that may have been omitted from the description of the work or the schedule of work items, but which is clearly necessary for the proper completion of the described work, shall be furnished the same as if it had been specified.

PROJECT SAFETY: The Contractor shall be solely responsible for all project safety and damages to persons and property directly or indirectly caused by his operations and, under all circumstances, he must comply with the laws and regulations of the City and the State of California relative to safety of persons and property and the interruption of traffic and the convenience of the public within the respective jurisdictions.

MATERIAL QUANTITIES: The quantities given herein, in the proposal and in the contract documents are approximate only, being given for convenience only. The Engineer and Owner do not, expressly or by implication, agree that the actual amount of work will correspond therewith. The bidder shall carefully examine the site work and the plans and specifications, and the proposal and contract documents and satisfy himself of the nature and quantities of the work to be done. The submission of a bid shall be conclusive evidence that the bidder has investigated and is satisfied as to the conditions to be encountered, the character, quality and scope of work to be performed, and the quantities of material to be furnished, and as to the requirements of the proposal, plans, specifications, and the contract documents.

WATER: Water for construction purposes shall be furnished by the contractor.

CLEARING AND GRUBBING: Clearing and grubbing shall conform to Section 16 of the State Standard Specifications.

WATERING: Watering shall conform to Section 17 of the State Standard Specifications.

EARTHWORK:

1) Earthwork shall conform to Section 19 of the State Standard Specifications and these Special Provisions.

2) Structure earthwork shall include excavation for structure and for imported structure backfill materials, as shown on the Plans.

3) Surcharge material is to be removed as shown, and disposed of by the contractor at a legal and approved location selected by the contractor, all at the contractor's expense.

4) Structure backfill shall conform to Section 19-3.06, "Structure Backfill", of the State Standard Specifications, and shall be approved by the Soils Engineer prior to hauling to, or placement on the site.

Roadway approach fills (except structural excavation and backfill) are not in this contract.

5) Imported borrow: Contractor shall not commence work on this item until authorized to do so in writing by the Engineer. Imported borrow shall conform to Section 19-7.02 of the State Standard Specifications and these special provisions. The imported borrow shall be used for the following items of work:

1. Imported borrow shall be placed between Station 45+50 and 50+00, except at locations of bridge structure and structural backfill, as shown on the Plans.

2. The placement of surcharge material between Station 45+50 and 50+00 as shown on the Plans.

The imported borrow material shall be approved by the soils Engineer prior to hauling to, or placement on the site. A guideline specification for the import borrow is as follows:

1. First, the import should be non-organic and non-expansive. If the import is a fine grained soil (more than half the soil grains are smaller than a 200 mesh sieve), the following limits should apply:

   a. The Liquid Limit should not be more than thirty-five (35).

   b. The Plasticity Index should not be greater than twenty-five (15).

   c. The Expansion Index should be five (5) or less.

2. If the soil is coarse grained (more than half the soil grains are larger than a 200-mesh sieve), the soil should meet the following parameters:

   a. Maximum Grain Size, two (2) inches or less.

   b. Gravel or Rock (more than 50% of the sample is larger than a #4 sieve), the coefficient of uniformity (Cu) should be equal to or greater than four (4). Individual particles of soil should be angular, sound, and durable. If the coarse grained material is a Sand (less than 50% of the sample is greater than a #4 sieve), the coefficient of uniformity (Cu) should be equal to or greater than six (6) and the soil should contain no less than five percent (5%) plastic fines and preferably at least ten percent (10%) or more of plastic fines.

The criteria outlined above should be used as a guide only in selecting or rejecting import for use on the project site. Surcharge material shall be material available from structural excavation insofar as it is available and the remainder shall come from imported borrow materials. There are no specific compaction requirements for the surcharge. The surcharge material shall be left in place a minimum of 90 days, prior to removing and constructing the approach slabs.

PILING:

1) Piling shall conform to Section 49 of the State Standard Specifications and as shown on the Plans and as in these special provisions.

2) Design Loading = 45 Tons (Caltrans Class 45c May 14,1982, Revised).

   Design Pile Length = 55 Feet

3) All concrete in piles and pile extensions shall contain not less than 8 sacks of cement per cubic yard. Portland Cement to be Type II Cement.

4) To facilitate pile installation, predrilling to a maximum depth of 10 feet may be employed, providing the auger is no larger than 8 inches in diameter.

5) All pile driving shall be inspected by a representative of the Soils Engineer and in no case should a pile be overdriven regardless of depth penetration. Once positioned for driving, the pile should be advanced continuously until reaching design depth or until refusal.

PRESTRESSING CONCRETE:

1) Prestressed concrete shall conform to Section 50 of the State Standard Specifications and as shown on the Plans.

2) Three sets of working drawings shall be submitted to the Engineer for approval prior to fabrication.

3) Pretensioning steel shall consist of 1/2" diameter, 7-wire strand, conforming to ASTM A-416, Grade 270K.

4) Reinforcing steel shall conform to ASTM A-615, Grade 60.

5) The total initial prestress force, after elastic shortening, but before time dependent effects shall be 878 kips (fsi = 179 ksi). The design assumed a total loss of prestress of 50 ksi, including elastic shortening. Final effective prestress force = 724 kips.

6) The minimum compressive strength of concrete at 28 days shall be 6000 psi. The minimum compressive strength at time of transfer shall be 5000 psi. Concrete shall be Class D concrete with "Type II Modified" Portland Cement. Sampling and testing shall be as required under "Concrete Structures", Note 9, below.

7) Camber: Prior to setting deck slab forms the Contractor shall submit to the Engineer the following information for each girder:

   1. Marking for each girder and time of casting.

   2. Camber immediately after release at precasting yard and age at release.

   3. After Erection: Location, elevations of ends and center of spans, and age when measurements were taken, for each girder.

   (These requirements are to verify or modify the camber of the deck and fillets.)

CONCRETE STRUCTURES:

1) Concrete structures shall conform to Section 51 of the State Standard Specifications and as set forth on the Plans and in these special provisions.

2) The Contractor shall submit three sets of working drawings to the Engineer for approval showing the method of forming for the bridge deck and diaphragms.

3) Handrails and wing walls are to receive a medium sand blast treatment. The thoroughly cured concrete surface shall be sandblasted with hard, sharp sand to produce an even fine-grained surface in which the mortar has been cut away leaving the aggregate exposed. Form-tie holes in sand blast surface finish areas to be in a uniform pattern and plugged 1/2"± from surface. In sand blasting, Contractor shall take care to avoid the plugged form-tie holes.

4) Sidewalks, curbs and rails shall not be placed until deck slab has gained its design strength.

5) Expansion joint filler shall conform to Section 51-1.12C, "Premolded Expansion Joint Fillers", of the State Standard Specifications.

6) Type "A" seals in sidewalks, curbs and rails to be grey.

7) Elastomeric bearing pads shall be 50 Hardness with one-half (1/2) inch thick (maximum) laminations. Compressive strain of any layer of an elastomeric bearing shall not exceed 7 percent at 800 psi average unit pressure.

8) Grout for bearing pads shall be a non-metallic, non-shrink, high strength grout. Installation as per manufacturer's recommendations to ensure bond. The minimum compressive strength at 28 days shall be 7000 psi.

9) Sampling and Testing: Samples for strength tests of each class of concrete shall be taken not less than once a day nor less than once for each 100 cubic yards of concrete or once for each major pour. Sampling and testing shall conform to Section 90-9 of the State Standard Specifications. A minimum of three (3) test cylinders shall be taken for each sample required. One cylinder shall be tested at seven (7) days and the other two (2) at 28 days.

REINFORCING STEEL:

1) Reinforcement shall conform to Section 52 of the State Standard Specifications and in these special provisions.

2) Three sets of working drawings shall be submitted to the Engineer for approval prior to fabrication.

3) All reinforcement, except prestressing steel, shall conform to ASTM A-615, Grade 60.

MISCELLANEOUS METAL: Miscellaneous metal shall conform to Section 75 of the State Standard Specifications and as shown on the Plans.

RAILINGS: Steel rails shall conform to Section 83 of the State Standard Specifications, and shall be galvanized after fabrication.

PORTLAND CEMENT CONCRETE:

1) Portland Cement Concrete shall conform to Section 90 of the State Standard Specifications and to these special provisions.

1 a) All pea gravel concrete grout for raised median shall develop a minimum compressive strength of 2500 p.s.i. at 28 days, and shall have a maximum size aggregate of 3/8", and shall have a minimum of seven sacks of cement per cubic yard of grout.

2) Cast-in-place concrete for abutments and pile caps shall be Class A Concrete with "Type V" Portland Cement and a minimum compressive strength of 3000 psi at 28 days.

3) All cast-in-place concrete, except abutments and pile caps, shall be Class D concrete with "Type II Modified" Portland Cement with a minimum compressive strength of 4000 psi at 28 days.

4) All cast-in-place concrete shall have 4 to 5½% air-entraining.

5) For Prestressed Concrete see "PILING" and "PRESTRESSING CONCRETE".

WATER MAIN: The water main shall be placed in the location shown on the plans, and in accordance with the City of Milpitas Standard Drawings, applicable sections of the State Standard Specifications, and City of Milpitas Standard Specifications for water mains and services. The water main, fittings and appurtances shall be constructed of materials as shown on the plans.

UTILITY DUCTS: The utility ducts shall be installed in the sidewalk section as shown.

a. Two (2) 6" diameter galvanized steel schedule 40 std. pipe furnished and installed herein under for Electrical, & gas.

b. Four (4) 4" diameter steel ducts will be furnished by the Telephone Company and installed by the Contractor herein under. (1) 4" diam. steel duct shall be furnished and installed hereunder for elec.

QUANTITIES

BRIDGE QUANTITIES

ITEM	UNITS	QUANTITY
Mobilization	Lump sum	1
Structural Excavation	cu.yd.	2,100
Structural Backfill	cu.yd.	2,285
Piles (70)	lin.ft.	3,850
Precast Prestressed Girders (14)	lin.ft.	1,348
Cast-in-place Concrete:		
Pile caps	cu.yd.	160
Abutments	cu.yd.	119
Wing Walls	cu.yd.	19
Deck & fillets	cu.yd.	142
Diaphragms	cu.yd.	26
Railing	cu.yd.	16
Sidewalk,curb Median	cu.yd.	68
Approach slab	cu.yd.	112
Channel Lining Replacement	cu.yd.	64
Reinforcing steel	lbs.	110,000
Railing (Brick & Steel)	lin.ft.	193
12"ø water line (ductile iron)	lin.ft.	311
6"ø electric duct	lin.ft.	145
4"ø telco duct (8) Elec. duct (5)	lin.ft.	724
Channel Lining removal	sq.ft.	880
8" ø gas sleeve duct	lin. ft.	145
River Cobble & Bedding	Sq. ft.	1,255
4" ø Spare Duct	lin. ft.	290
2" ø Cable TV Duct	lin. ft.	145

NOTE:

THE ABOVE QUANTITIES ARE FOR CONTRACTORS' INFORMATION ONLY, NOT TO BE USED FOR COST ESTIMATING OR PAYMENT PURPOSES.

REGISTERED PROFESSIONAL ENGINEER JOHN WEBSTER BROWN No. 784 Exp. 12/31/86 STRUCTURAL STATE OF CALIFORNIA

JOHN WEBSTER BROWN / CIVIL & STRUCTURAL ENGINEERS
1135 Terminal Way — Suite 108 / Reno, Nevada 89502 / (702) 322-3872

DATE: 8/13/86				
SCALE:				
DESIGNED: JWB, RPF, CDS				
DRAWN: R.P.F.	2	KRC	3/21/88	REVISED QUANITY SCHEDULE
CHECKED: JWB.	3		4/29/91	UTILITY DUCTS NOTE
PROJ. ENGR: J.W.B.	1	JWB	1/3/89	68' WIDTH
		BY	DATE	REVISIONS

Reimer Associates
CIVIL / ENVIRONMENTAL SYSTEMS ENGINEERS • URBAN PLANNERS
1833 Old Bayshore Highway • Burlingame, California 94010 • (415) 692-1830

TECHNICAL SPECIFICATIONS

IMPROVEMENT PLANS
MILPITAS CALIFORNIA

SANTA CLARA_CA Work Maps
SANTA CLARA_CA0862

SHEET 11 OF 16 SHEETS
JOB NO. R-958

ADDENDUM 2-755

JWB 1886 R

NOTE: SEE SHEET 14 FOR STREET SECTION DETAIL

R/W DEDICATION UNDER FUTURE PARCEL MAP.

FAIRVIEW WAY

PENITENCIA CREEK

CALIFORNIA CIRCLE

SCALE: 1" = 20'

CURVE DATA				
CURVE	LOCATION	RADIUS	Δ	LENGTH
Ⓐ	F/C	220	19°26'54.0"	74.68'
Ⓑ	F/C	490	19°26'54.0"	135.79'

4		03/30/90	DRIVEWAY STANDARD
3		04/18/90	DRIVEWAY WIDTH
2		11/30/89	NOTE
1		5/15/89	GATE VALVE / INCREASER / ∠ GRADE
0		5/9/89	TAPPING SLEEVE SIZE
3		3/28/89	REVISIONS PER CITY COMMENTS/CONDUIT
2		2/17/89	JOINT TRENCH / SIDEWALK.
1		2/13/89	IRRIGATION NOTE / SIDEWALK.
	BY	DATE	REVISIONS

DATE: DEC. 1988
SCALE: AS SHOWN
DESIGNED: AR
DRAWN: AR, LSA
CHECKED:
PROJ. ENGR.: RJN

APPROVED
BY:
DATE: R.C.E.

APPROVED
BY:
DATE: R.C.E.

Reimer Associates
URBAN / ENVIRONMENTAL SYSTEMS ENGINEERS
120 Burlingame Office Center • 1633 Old Bayshore Highway
Burlingame, California • 94010 • (415) 692-1830

CALIFORNIA CIRCLE & MILMONT DRIVE - STA. 45+50 TO STA. 50+00
CALIFORNIA LANDING
MILPITAS CALIFORNIA

SANTA CLARA_CA Work Maps
SANTA CLARA_CA0863

SHEET 13 OF 15 SHEETS
JOB NO. R-958

AS-BUILT 2-755

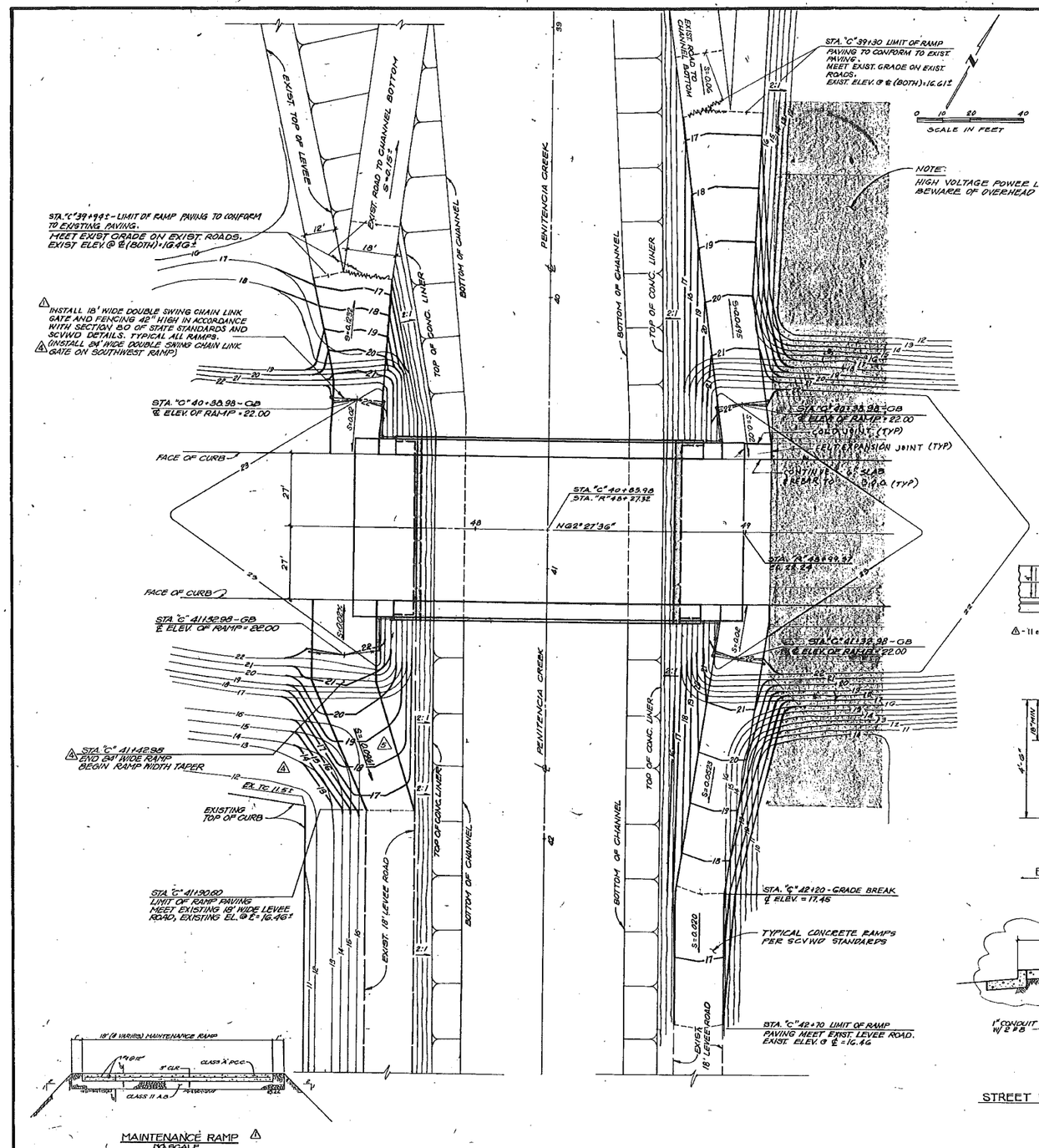

MAINTENANCE RAMP ⚠
NO SCALE

NOTES:

1. WORK SHOWN AS EXISTING ON EASTERLY SIDE OF PENITENCIA CREEK TO BE DONE BY OTHERS PRIOR TO THIS CONTRACT.
2. SEE SHEET 13 FOR DRIVEWAY LOCATIONS ONTO RAMPS AND CURB TAPERS.

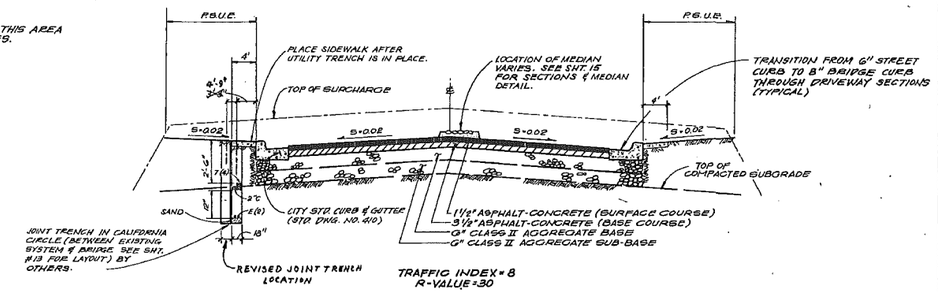

STREET SECTION WHERE PAVEMENT CROWN IS AT STREET ℄
FROM STA. 45+50 TO STA. 47+55.07
FROM STA. 48+99.57 TO STA. 50+00

⚠

CALIFORNIA CIRCLE & MILMONT DRIVE PAVEMENT SECTION DETAIL

NO SCALE

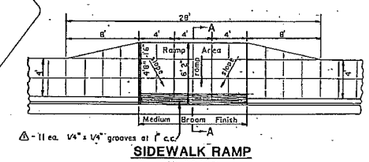

⚠ - 11 ea. 1/4" x 1/4" grooves at 1" c.c.

SIDEWALK RAMP
NO SCALE

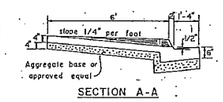

SECTION A-A

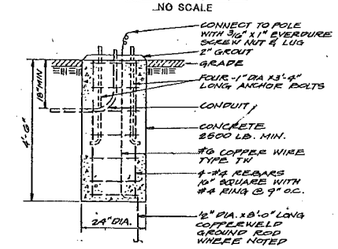

ELECTROLIER BASE
NO SCALE

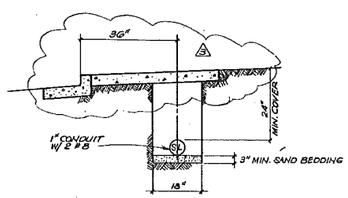

STREET LIGHT CONDUIT DETAIL
NO SCALE

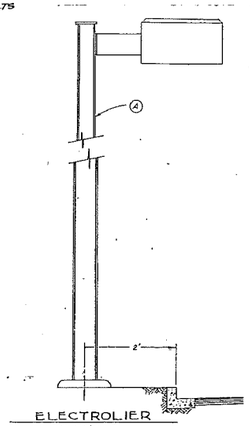

ELECTROLIER
NO SCALE
(AT STA. 47+26)

LUMINAIRE SCHEDULE

L HIGH PRESSURE SODIUM, 19" SQUARE, ONE PIECE EXTRUDED ALUMINUM BOX ASSEMBLY, LENS FRAME MITERED EXTRUDED ALUMINUM, CLEAR HEAT AND IMPACT RESISTANT FLAT GLASS LENS, SILICONE GASKETS AND HINGE PINS, HOMOGENEOUS SHEET ALUMINUM BRIGHTENED AND ANODIZED REFLECTOR TO GIVE TYPE I DISTRIBUTION, HIGH POWER FACTOR AUTO REGULATOR BALLAST, 1'0" EXTRUDED ALUMINUM ARM, PHOTOELECTRIC CELL. GARDCO H 1911-240,250 HPS BLA LAMP LU-250.

L1 SAME AS TYPE I EXCEPT TYPE III DISTRIBUTION. GARDCO H 1919-240,250 HPS BLA LAMP-LU-250

ELECTROLIER SCHEDULE

1-TYPE L LUMINAIRE. 30' MOUNTING HEIGHT SQUARE TAPERED POLE, SHAFT SIZE 6-3/8" X 3'0" X 30'0", GA. STEEL, SHOE BASE WITH COVER 4" X 6-1/2" HAND HOLE 90° TO CENTER LINE OF ARMS PRIME-PAINTED, TWO COATS ACRYLIC LATEX TO MATCH LIMINAIRE. GALVANIZED ANCHOR BOLTS. VALMONT 6.38 300-P2 OR APPROVED EQUAL.

CONDUIT

STREET LIGHTING CONDUIT SHALL BE SCHEDULE 40 PVC. CONDUCTORS SHALL BE STANDARD Cu., 600 V., THHN INSULATED.

B.M. Sheet exp 6/31/93

PRELIMINARY NOT FOR CONSTRUCTION

DATE: DEC. 1988			
SCALE: AS SHOWN	⚠	5/19/90	SOUTHWEST RAMP GRADING
DESIGNED: DLP, EMR	⚠	4/19/90	SOUTHWEST RAMP GRADING / NOTES
DRAWN: EMR, JSD	⚠	2/23/89	STREET LIGHT CONDUIT DETAIL
CHECKED:	⚠	2/17/89	JOINT TRENCH ON STREET SECTION.
PROJ. ENGR: RJN	⚠	2/13/89	MAINTENANCE RAMP, FENCING & GATES PER SCVWD.
	BY	DATE	REVISIONS

NORTHWEST ORIGIN HIGHWAY NO. 1300L

Reimer Associates
CIVIL ENGINEERS · LANDSCAPE ARCHITECTS · URBAN PLANNERS
1633 Old Bayshore Highway
Burlingame, California 94010
(415) 692-1830
2600 Kitty Hawk Road
Livermore, California 94550
(415) 449-0230

CALIFORNIA CIRCLE & MILMONT DRIVE - STA. 45+50 TO STA. 50+00 BRIDGE IMPROVEMENTS
DETAIL SHEET
CALIFORNIA LANDING
MILPITAS, CALIFORNIA

SANTA CLARA_CA Work Maps
SANTA CLARA_CA0864

SHEET 14 OF 15 SHEETS
JOB NO. R-958.

AS-BUILT 2-755

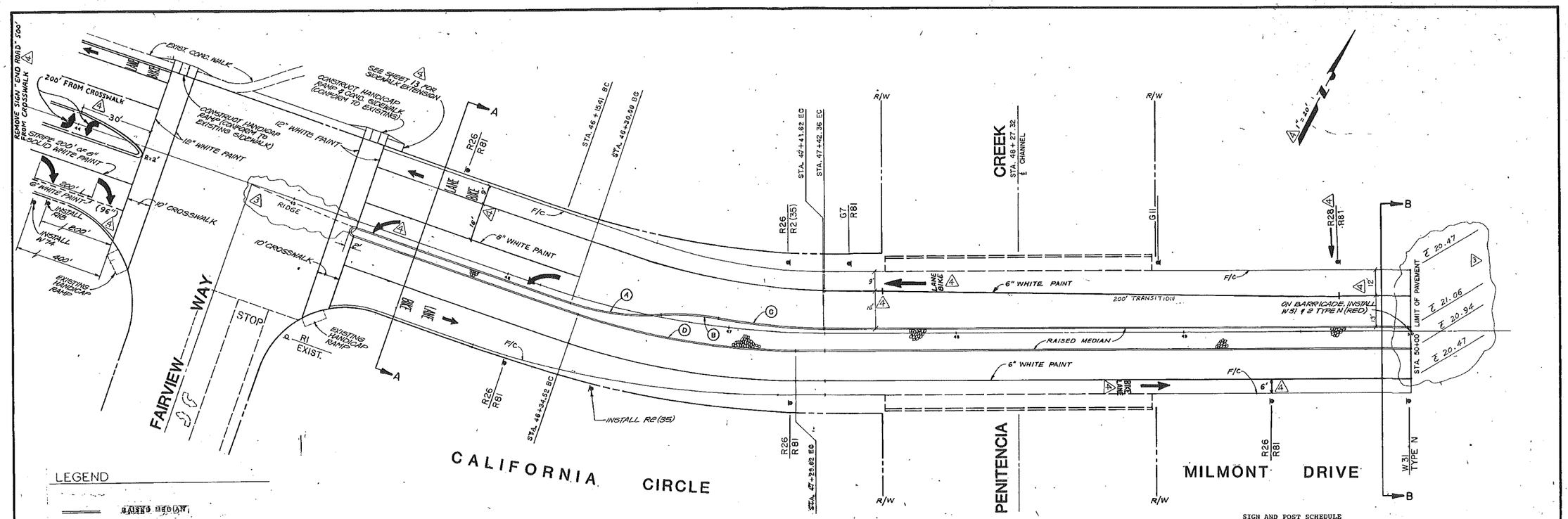

LEGEND

- RAISED MEDIAN
- TURN LANE
- EDGE LINE, 4" WHITE PAINT
- BIKE LANE LINE, 6" WHITE PAINT
- EXIST. / NEW — SIGN INSTALLATION
- ~~ELECTROLIER MOUNTED SIGN~~
- LIMIT LINE, 12" WHITE PAINT
- CROSSWALK, 12" WHITE PAINT

PAVEMENT MARKINGS WILL BE WHITE HOT APPLIED. FOR PAVEMENT ARROW DETAIL, SEE FIGURE 6-23, STATE TRAFFIC MANUAL. USE 18' THROUGH AND LANE DROP ARROW, AND 24' DIRECTIONAL ARROW.

SIGNING & STRIPING

General Notes:

1. All signs shall conform to the State of California Traffic Manual, Chapter 4, and 1979 edition of "Uniform Sign Chart."
2. Signs to be of standard size designated for each type in the Traffic Manual, except where noted otherwise.
3. Mounting shall conform to appropriate provisions of Chapter 4, Traffic Manual, and applicable "standard plans," State of California (Caltrans), dated March 1977, except where otherwise indicated on plans.
4. All traffic signs (except street name plates) shall be of minimum .080 gage aluminum blanks with reflective faces of Scotchlite (engineer grade) or approved equal.
5. Striping shall conform to appropriate provisions of Chapter 6, "Delineation" of the Traffic Manual and Chapter XVI of the Maintenance Manual, State of California.
6. Striping paint shall be of "pre-mix" beads in paint type as manufactured by J. E. Bauer Co., or approved equal.
7. Painted legends shall conform to standard sizes and patterns shown in State of California Maintenance Manual, Chapter XVI.
8. **All signing & striping shall be done by contractor.** △4

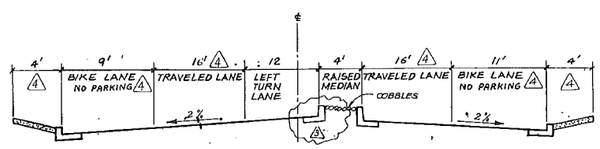

SECTION A–A
N.T.S.

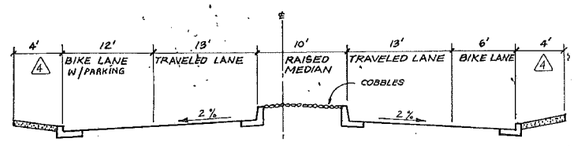

SECTION B–B
N.T.S.

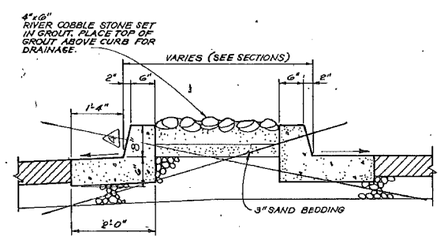

△ ~~MEDIAN DETAIL~~
N.T.S.
VOID

SIGN AND POST SCHEDULE

CODE NO.	QUANTITY	TYPE OR LEGEND	SIZE	MOUNTING POST SIZE	MOUNTING LENGTH	REMARKS
R26	6	no parking	12" x 18"	2" steel	12'	
R2 (35)	1	speed limit	24" x 30"			install on same post with no parking sign as shown on plans
R81	5	bike lane	24" x 18"			install on same post with no parking sign as shown on plans.
~~R93~~	△3	~~bike route~~	~~24" x 18"~~			~~install on same post with no parking sign as shown on plans.~~
W31	1	END (of roadway)	36" x 36"	wood	12'	
TYPE N (red)	1					install on same post with W31 as shown on plans.
G7	1	FAIRVIEW WAY	18" x 36"	wood	12'	
G11	1	PENITENCIA CREEK	18" x 36"	wood	12'	

CURVE DATA

CURVE	LOCATION	RADIUS	△	LENGTH
A	F/C OF MEDIAN	100'	22° 54' 06.8"	39.97'
B	F/C OF MEDIAN	100'	14° 25' 44.2"	25.18'
C	F/C OF MEDIAN	245'	10° 58' 31.5"	46.93'
D	F/C OF MEDIAN	287'	19° 26' 54.0"	97.42'

K. McGuell exp 3/31/93

DATE: DEC. 1988				
SCALE: 1" = 20'				
DESIGNED: KLS	△2		12/30/88	SIGNING & STRIPING
DRAWN: JSD, LSA	△3		11/30/89	& GRADES / SECTION A-A / RIDGE
CHECKED:			9/27/89	REVISIONS PER CITY COMMENTS
PROJ. ENGR: RJN	△1		2/13/91	MEDIAN DETAIL / SIGN & POST SCHEDULE.
		BY	DATE	REVISIONS

Reimer Associates
CIVIL ENGINEERS · LANDSCAPE ARCHITECTS · URBAN PLANNERS
1633 Old Bayshore Highway, Burlingame, California 94010, (415) 692-1830
2600 Kitty Hawk Road, Livermore, California 94550, (415) 449-0230

CALIFORNIA CIRCLE & MILMONT DRIVE - STA. 45+50 TO STA. 50+00
SIGNING AND STRIPING PLAN

CALIFORNIA LANDING
MILPITAS CALIFORNIA

SANTA CLARA CA Work Maps
SANTA CLARA_CA0865

SHEET 15 OF 15 SHEETS
JOB NO. R-958

AS-BUILT 2-755

Tab 6

Schaaf & Wheeler
CONSULTING CIVIL ENGINEERS

100 N. Winchester Blvd., Suite 200
Santa Clara, CA 95050
(408) 246-4848
FAX (408) 246-5624
canderson@swsv.com

TECHNICAL MEMORANDUM

PROJECT: Lower Penitencia Creek Levee Recertification DATE: April 30, 2009

PREPARED: Charles D. Anderson, PE and M. Eliza McNulty, PE JOB #: SCVW.18.08-003-C4

SUBJECT: Freeboard Evaluation for Lower Penitencia Creek Levee in Milpitas, California (Task C4)

The Santa Clara Valley Water District (District) has co-signed a PAL agreement to re-certify the levee on the eastern side of Lower Penitencia Creek within the City of Milpitas (City). The District and City are participating in FEMA's Map Modernization Program (MapMod) to reflect the current reality of the natural and man-made environments as they relate to flood hazards. The ultimate goal is to provide updated maps that support a flood insurance program properly aligned with actual risk. Access to accurate maps enhances community-based floodplain decisions, provides jurisdictional agencies with the proper tools for floodplain management and provides local property owners with meaningful flood risk data so they may make informed decisions.

District and City participation in MapMod includes the accreditation of District levees that provide protection from the base flood, that is, the one percent (1%) annual chance flood also referred to as the "100-year flood." Certain levees believed to meet federal standards for levee performance – as listed in the Code of Federal Regulations, Title 44, Section 65 (44 CFR §65) – are thought to be eligible as Provisionally Accredited Levees (PAL) and are currently shown as providing one-percent flood protection on Flood Insurance Rate Maps (FIRMs).

To receive FEMA accreditation, the levee must be shown to conform to the requirements of 44 CFR §65.10 as indicated by the terms of the Provisionally Accredited Levee Program (PAL):

> "To the best of [the District's and City's] knowledge the [subject] levee...meets the requirements of 44 CFR 65.10 and has been maintained in accordance with an adopted operation and maintenance plan and records of levee maintenance and operation, as well as tests of the mechanized interior drainage system if applicable....."

The purpose of this memorandum is to provide documentation that ***the subject levee meets federal standards for levee performance relative to freeboard*** as described in 44 CFR 65.10. This documentation will eventually be provided to FEMA and their Technical Evaluation Contractor if the Lower Penitencia Creek levee is shown to meet all other NFIP standards for levee certification.

Limits of Levee Freeboard Evaluation

The District intends to evaluate and certify the Lower Penitencia Creek levee located on the eastern bank of Lower Penitencia Creek in Milpitas, which was constructed by a private developer in 1988. The levee extends from the Berryessa Creek Levee at its upstream limit to the upstream face of California Circle. The limit of this levee re-certification study is between the confluence of Lower Penitencia Creek with Berryessa Creek and the upstream face of California Circle. The approximate total length of the levee re-certification reach is 3,400 feet or 0.65 mile.

Limits of Hydraulic Evaluation

To compute levee freeboard and ascertain whether NFIP standards for freeboard are met, a one-percent water surface profile for Lower Penitencia Creek has been calculated from the creek's confluence with Coyote Creek to its confluence with Berryessa Creek. A water surface profile downstream of the levee is necessary to establish backwater conditions at the levee.

Sources of Data Used to Evaluate Levee Freeboard

The primary source of data used in this evaluation is a field survey of the Lower Penitencia Creek channel and levees from the Berryessa Creek confluence to the Coyote Creek confluence. This certified survey was undertaken in September 2008 by Ruggeri Jensen Azar & Associates (RJA), after verifying that the effective hydraulic model no longer accurately represented current creek channel conditions. This field survey is the basis for the cross sections in the HEC-RAS model used for freeboard evaluation.

Freeboard Requirements

44 CFR 65.10 mandates that riverine levees provide a minimum freeboard of three feet above the water surface level of the base (one-percent) flood. An additional foot of freeboard (i.e. 4 feet of freeboard) is required within 100 feet of either side of structures such as bridges or wherever the flow is constricted. An additional one-half foot of freeboard above the minimum is required at the upstream end of the levee (i.e. 3.5 feet freeboard), tapering to not less than the minimum at the downstream end (i.e. 3 feet freeboard). Since the Lower Penitencia Creek levee ties directly into the previously certified Berryessa Creek levee without ending per se, the additional one half foot freeboard criterion has not been applied. Nonetheless, if the additional half-foot criterion were applied, the determination of adequate freeboard for the Lower Penitencia Creek East Levee would not change.

Methodology

To evaluate whether required freeboard above the base flood elevation is provided by the existing levee, an HEC-RAS model was prepared to reflect current conditions within the creek channel and our evaluation of relevant hydraulic parameters including channel roughness, bridge modeling, transition losses and boundary conditions. Subcritical flow computations have been made since there are no reach locations exhibiting supercritical flow during a base flood discharge. A levee must be certified to at least the base flow (i.e. 1% or 100-year discharge). This study analyzes whether the Lower Penitencia Creek levee meets the freeboard NFIP standards at the published base flow discharge.

Channel Roughness

In one-dimensional open channel flow analysis as performed using HEC-RAS, a single parameter known as "Manning's n" is used to represent the retarding forces to flow imposed by the channel bed and banks. Values for "n" are published in various literature – and in the absence of high water marks with which to calibrate stream reaches with known discharge (as is the case for Lower Penitencia Creek in the leveed condition) – are often relied upon for hydraulic modeling. When selecting roughness values, it is important to remember that in one-dimensional flow analysis, Manning's "n" accounts for the flow resistance due to a host of hydraulic phenomena beyond boundary shear.

Several sources have been used to estimate roughness factors for water surface profile determination within Lower Penitencia Creek. These include "n" values published by Henderson (1966) and Chow (1959), engineering judgment, and procedures outlined by the USACE (EM 1110-2-1601, July 1991). Channel roughness considers the channel as if maintained in no worse than its present condition, evaluated as if it were the rainy season.

Roughness elements along the wetted perimeter of Lower Penitencia Creek can vary across an individual cross section. For instance the channel cross section might contain elements of grassed banks, mature trees, an island, shrubs or brush, access areas and/or bare earth. To compute water surface elevations in a channel with variable roughness using a one-dimensional model (i.e. with a mean velocity), it is necessary to estimate an effective (composite) roughness value for each cross section. Flow velocities vary across the channel due to variation in both the flow depth and roughness from one channel element to the next. To calculate mean flow velocity without actually subdividing each channel section, several methods are suggested in the literature for estimating a composite roughness value within non-uniform channels.

HEC-RAS calculates a composite "n" value based (apparently) on an assumption that average velocities within each channel element are equal and equivalent to the mean channel velocity as a whole. (HEC, 1998) Since this may not necessarily be the case when there is a wide variation in roughness elements, several other methods for weighting "n" are considered and used to select roughness values based on judgment. Composite weighting generally involves breaking a representative reach cross section into elements that reflect cross sectional geometry and the various roughness characteristics, such as bed material, channel sinuosity, vegetation and obstructions. Roughness values for each element are estimated, and a weighting equation is used to obtain the equivalent roughness coefficient for that reach.

Lotter assumed that the total discharge in each section is equal to the sum of the discharges of individual areas subdivided by roughness (i.e. conservation of mass). The resultant equivalent roughness coefficient formula, consistent with US Army Corps of Engineers engineer manual EM 1110-2-1601, is provided by Chow as Equation 6-19:

$$\bar{n} = \frac{P\,R^{5/3}}{\sum_{1}^{N}\left(\frac{P_N\,R_N^{5/3}}{n_N}\right)} = \frac{P\,R^{5/3}}{\frac{P_1\,R_1^{5/3}}{n_1} + \frac{P_2\,R_2^{5/3}}{n_2} + \ldots + \frac{P_N\,R_N^{5/3}}{n_N}}$$

where $\overline{n}$ = composite roughness coefficient for cross section
P = total wetted perimeter of cross section (feet)
R = total hydraulic radius of cross section (feet)
P_i = wetted perimeter of cross section element i (feet)
R_i = hydraulic radius of cross section element i (feet)
N_i = Manning's roughness coefficient for cross section element i

It could be assumed that the total force resisting the flow is equal to the sum of the forces resisting the flow developed in the subdivided areas (Pavlovskii, Muhlhofer, Einstein and Banks). The resultant equivalent roughness coefficient formula is provided by Chow (1959) as Equation 6-18:

$$\overline{n} = \frac{\left[\sum_{1}^{N} P_N n_N\right]^{1/2}}{P^{1/2}} = \frac{\left(P_1 n_1^{\ 2} + P_2 n_2^{\ 2} + \ldots + P_N n_N^{\ 2}\right)^{1/2}}{P^{1/2}}$$

where $\overline{n}$ = composite roughness coefficient for cross section
P = total wetted perimeter of cross section (feet)
P_i = wetted perimeter of cross section element i (feet)
n_i = Manning's roughness coefficient for cross section element i

In USACE EM 1110-2-2601 the Colbatch method, which weights roughness based on subdivided cross sectional area is said to be more accurate than an assumption of equal velocity. The resultant equivalent roughness coefficient formula from EM 1110-2-1601 (5-22) is:

$$\overline{n} = \frac{\left[\sum_{1}^{N} A_N n_N^{\ 1.5}\right]^{2/3}}{A^{2/3}} = \frac{\left(A_1 n_1^{\ 1.5} + A_2 n_2^{\ 1.5} + \ldots + A_N n_N^{\ 1.5}\right)^{2/3}}{A^{2/3}}$$

where n = composite roughness coefficient for cross section
$\overline{A}$ = total area of cross section (square feet)
A_i = area of cross section element i (square feet)
n_i = Manning's roughness coefficient for cross section element i

Table 1 presents the selection of channel roughness by reach, from the Berryessa Creek Confluence to the Coyote Creek confluence. Detailed spread sheets are attached for each reach that show the breakdown of roughness elements and composite roughness calculations. Reach descriptions are based on channel stationing that begins at 1+86 at the Coyote Creek confluence. This stationing was chosen in an effort to match the stationing from the District's HEC-2 model from 1990. The selected roughness coefficient is generally derived as an average of the roughness estimated using the sum of forces method and the Colbatch method. Using the conveyance method produces unrealistically low composite roughness characteristics in those reaches with heavy vegetation within the channel.

Table 1
Channel Roughness Coefficients Used for Freeboard Evaluation

Station		Photo	Representative Section	Composite Roughness Coefficient (Manning's "n")			
From	To			Conveyance	ΣForce	Colbatch	Selected
1+86	14+50	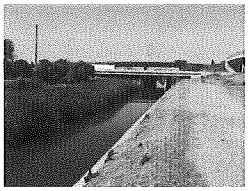	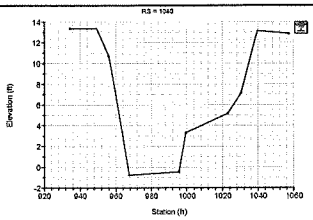	0.027	0.030	0.032	0.030
14+50	20+40		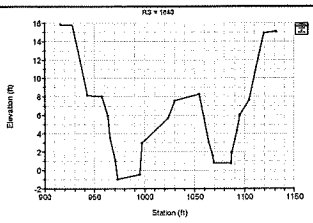	0.032	0.039	0.038	0.038
20+40	38+50		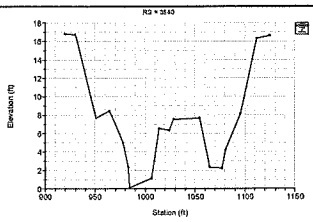	0.034	0.040	0.039	0.038
38+50	46+40	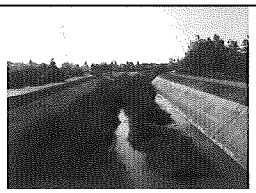	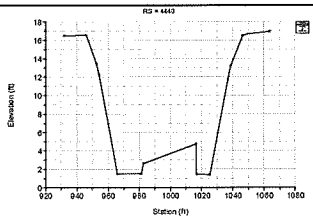	0.027	0.031	0.031	0.030

Bridge Modeling

In addition to the energy required to overcome channel resistance, structures such as bridges and culverts also cause energy losses, which can result in a raised water surface profile. Methods provided by HEC-RAS for analyzing bridges and culverts under low flow and pressurized conditions are employed in the computations for Lower Penitencia Creek.

Several methods are available through HEC-RAS to compute energy losses through a bridge. The "energy only" or standard step method handles a bridge section without piers in the same manner as a natural river section, except that the area between the low chord of the bridge (soffit) and the top of road is subtracted from the total cross-sectional area, and the wetted perimeter is increased where water is in contact with the bridge. Increased frictional resistance due to the added wetted perimeter is included in the energy loss through the structure. This method is appropriate where there are no piers and the base flood elevation does not touch the bridge soffit, which is the case for the California Circle Bridge and the Milmont Avenue Bridge.

When bridge piers are present as is the case for the I-880 bridge and the South I-880 approach ramp bridge, in addition to the "energy only" method, conservation of momentum is applied by using a coefficient of drag (1.33 for a semicircular nose and tail), as is Yarnell's method for subcritical "Class A" low flow through the bridge (with a pier coefficient of 0.90 for a semicircular nose and tail). HEC-RAS calculates losses through the bridge using all three methods and applies the answer with the highest calculated upstream energy grade.

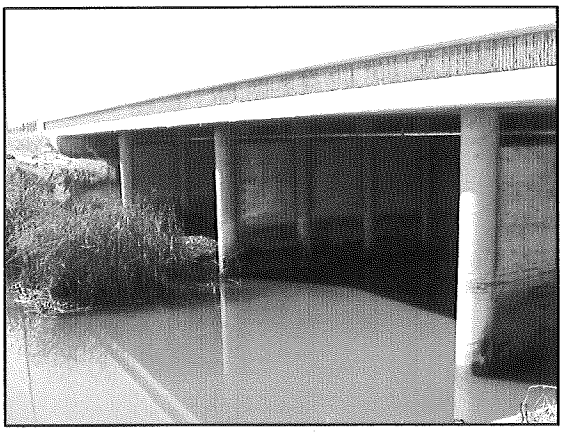

HEC-RAS results indicate that all bridges within the reach function under Class A (subcritical) low flow conditions with the certifiable discharge in Lower Penitencia Creek. The lowest part of the bridge superstructures are above the energy grade line at all locations. For three of the bridges (I-880 approach ramp, California Circle, and Milmont Avenue), the "energy only" method provides the highest bridge losses. At the I-880 Bridge, the conservation of momentum method provides the highest bridge losses.

Transition Losses

An energy loss also takes place just upstream and downstream from each structure as flow contracts at a ratio of 1:1 into a flow constriction and expands at a ratio of 1:4 out of a flow constriction such as bridge abutments. A flow contraction coefficient of 0.1 is used for gradual cross sectional transitions, which characterize the majority of Lower Penitencia Creek. Similarly a flow expansion coefficient of 0.3 is used for gradual transitions. (Reference: USACE, Hydrologic Engineering Center) Contraction and expansion coefficients are increased to 0.3 and 0.5 respectively wherever turbulent conditions create the potential for energy loss, such as at a bridge (or culvert), channel bend, pool, or maintenance access ramp.

Boundary Conditions

For subcritical backwater computations, the upstream boundary condition is discharge and the downstream boundary condition is water surface elevation (stage). As directed by the District, Schaaf & Wheeler used the effective 1% (base flood) discharge and flood profile published in the June 22, 1998 Flood Insurance Study (FIS) for the City of Milpitas to determine whether the levee provides sufficient freeboard. The starting coincident water surface elevation is 7.5 feet NGVD29, or 10.28 feet NAVD.

The Summary of Discharges table in the effective FIS shows a one-percent discharge of 2,600 cfs downstream of the confluence with Berryessa Creek, and a one-percent discharge of 3,500 cfs at Nimitz Freeway (Interstate 880), Subsequent to the calculation of the base flood discharge that is published in the effective FIS, the City of Milpitas constructed a number of stormwater pumping facilities that discharge to Lower Penitencia Creek within the study reach. Table 2 summarizes the base flood discharge used in the present analysis, which conservatively assumes a coincident discharge of local interior runoff at each pump station's rated capacity and the maximum effective base discharge listed for the recertification reach.

Table 2
Effective Base Flood Flow with Coincident Pump Station Discharge

River Station	Pumping Facility	Total Pump Capacity (gpm)	Pump Station Capacity (cfs)	Base Flood Discharge (cfs)
				3,500
46+40	Abbott Pump Station	10,700	25	3,525
28+10	Jurgens Pump Station	67,000	150	3,675
10+40	California Circle Pump Station	51,000	120	3,795

FREEBOARD

Freeboard provides a measure of safety that compensates for the many unknown and difficult-to-quantify parameters that affect the calculation of flood elevations. These factors include uncertainty in rainfall data, soil loss parameters, watershed urbanization, wave action, debris at bridge openings, and general uncertainties in hydrologic and hydraulic procedures. Freeboard is usually expressed in terms of feet above the design base flood elevation. To meet FEMA standards, freeboard is necessary whenever a levee system, including structural floodwalls, is used to provide flood protection.

When mapping flood-prone areas, FEMA only recognizes those levee systems meeting their criteria, which includes a minimum three feet of freeboard whenever the design one-percent water surface elevation is carried above the natural ground elevation. An additional six inches of freeboard (3.5 feet above the water surface) are required at the upstream end of the levee system, tapering to the minimum freeboard of 3.0 feet at the downstream end of the levee. An additional foot of freeboard (4.0 feet above the water surface) must be provided within 100 feet of each side of any structure, such as a bridge or culvert. This additional freeboard criterion is applied at all bridges within the levee reach in question.

Freeboard Evaluation

Attached tables and profiles provide the following information:

1. HEC-RAS hydraulic model output information including main channel invert, water surface elevation, energy grade elevation, average channel velocity and Froude Number.
2. Water surface profiles for the published base flood (1%) discharge of 3,500 cfs with additional coincident pumped interior drainage from Table 2.
3. Required levee elevation to meet NFIP freeboard criteria.
4. Surveyed levee elevations.
5. Determination of whether the NFIP freeboard criterion is met for the effective base flood discharge.

Conclusion

The levee along the eastern side of Lower Penitencia Creek can be certified to meet NFIP freeboard criteria at the published base flood discharge of 3,500 cfs with additional flow from City pumping facilities. Existing field conditions as of September 2008 have been used as the basis for this conclusion. For this conclusion to remain valid, the District must maintain Lower Penitencia Creek in accordance with its adopted stream maintenance plan for vegetation growth and sediment management. The next phases of work will be the completion an interior drainage study and geotechnical evaluation using USACE stability and seepage requirements for certification.

Summary of Freeboard Evaluation for Lower Penitencia Creek Levee on Eastern Bank in Milpitas

River Station	Q Total	Channel Invert	W.S. Elev	EGL	Avg. Channel Velocity	Froude No.	Top of Levee	Natural Ground Elev.	Levee Condition?	Freeboard Reqd. for Certification	Reqd. Freeboard Elevation	Freeboard Provided	Certifiable?
	(cfs)	(ft NAVD)	(ft NAVD)	(ft NAVD)	(ft/sec)		(ft NAVD)	(ft NAVD)		(feet)	(ft NAVD)	(feet)	
UPSTREAM LIMIT OF LEVEE RE-CERTIFICATION													
46+40	3525	4.50	16.51	16.67	3.22	0.19	19.71	17.0	NO	---	N/A	3.20	N/A
44+40	3525	4.21	16.29	16.59	4.41	0.26	19.38	18.0	NO	---	N/A	3.09	N/A
41+75	3525	3.98	16.12	16.45	4.56	0.27	25.14	18.0	NO	---	N/A	9.02	N/A
41+42	Milmont Drive Bridge												
41+04	3525	4.06	16.08	16.41	4.59	0.27	25.14	19.0	NO	3.50	19.58	9.06	N/A
40+35	3525	4.07	16.10	16.34	3.97	0.23	21.95	18.0	NO	3.49	19.59	5.85	N/A
38+50	3525	4.05	16.12	16.24	2.75	0.18	19.65	12.0	YES	3.46	19.58	3.53	YES
35+40	3525	2.92	16.00	16.13	2.87	0.19	19.52	15.0	YES	3.40	19.40	3.52	YES
32+51	3525	2.77	15.89	16.01	2.87	0.19	19.46	14.0	YES	3.35	19.24	3.57	YES
30+26	3525	2.93	15.79	15.92	2.86	0.19	19.63	11.0	YES	3.31	19.10	3.84	YES
28+10	3675	1.58	15.69	15.82	2.94	0.19	19.04	14.0	YES	3.28	18.97	3.35	YES
25+40	3675	2.15	15.58	15.71	2.88	0.19	19.12	16.0	NO	3.23	18.81	3.54	YES
23+20	3675	2.08	15.48	15.61	2.93	0.19	18.74	15.0	YES	3.19	18.67	3.26	YES
20+40	3675	2.47	15.36	15.48	2.82	0.18	18.67	14.0	YES	3.14	18.50	3.31	YES
16+40	3675	1.84	15.22	15.33	2.70	0.17	18.56	13.0	YES	3.07	18.29	3.34	YES
14+50	3675	2.54	15.18	15.27	2.46	0.15	18.75	13.0	YES	3.04	18.22	3.57	YES
13+50	3675	2.37	15.07	15.24	3.32	0.20	18.85	15.0	YES	3.02	18.09	3.78	YES
12+23	3675	2.16	14.77	15.13	4.84	0.29	19.93	20.0	NO	3.00	17.77	5.16	YES
DOWNSTREAM LIMIT OF LEVEE													
11+80	California Circle Bridge												
11+30	3675	2.07	14.71	15.08	4.86	0.29							
10+40	3795	2.05	14.53	14.99	5.44	0.33							
8+58	3795	1.43	14.53	14.82	4.32	0.27							
7+68	3795	1.13	14.53	14.74	3.71	0.22							
7+00	I-880 Bridge												
5+34	3795	1.68	13.40	13.59	3.47	0.20							
4+67	3795	1.68	13.33	13.56	3.86	0.21							
4+34	I-880 Approach Ramp Bridge												
4+28.06	3795	4.89	12.21	13.25	8.19	0.64							
3+66	3795	4.89	11.47	12.89	9.57	0.79							
1+86	3795	3.52	10.28	11.86	10.10	0.85							

Lower Penitencia Creek East Levee Freeboard Evaluation
Q(1%) = 3,500 cfs at I-880 + Local Pump Station Discharges

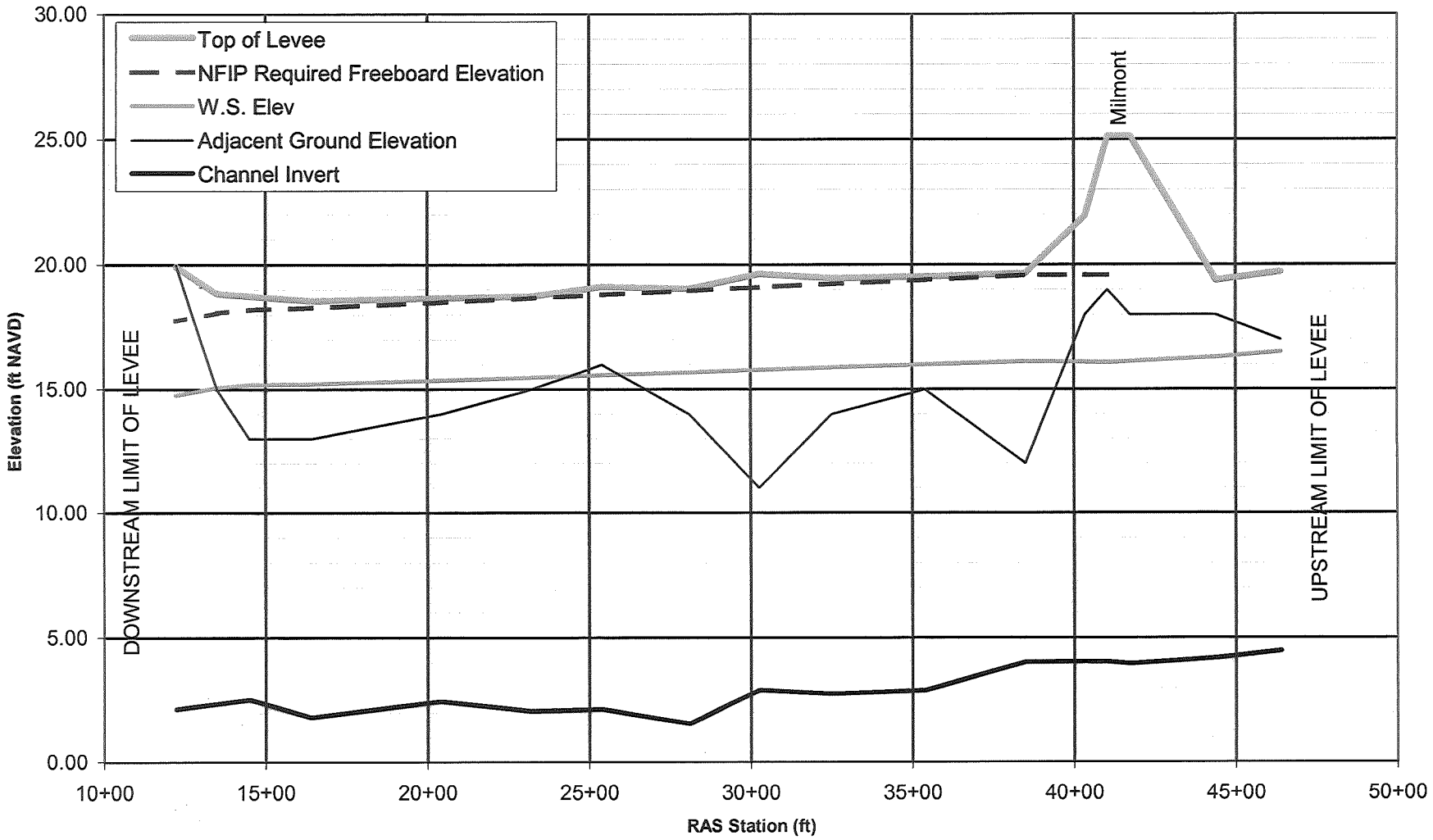

SCVWD Levee Recertification
Lower Penitencia Creek
Composite Roughness Calculations
*Elevations in ft NAVD
Reach 1
Station 46+40 to 38+50 (rep. xsec 44+40)

Channel Element	Elev	b	SS	n
Left Bank			1	0.020
Left Channel	1.5	15.74		0.025
Island	3.8	35.52		0.040
Right Channel	1.5	8.59		0.025
Right bank			1	0.020

Total Discharge	**3,525**	cfs
WSEL	**12.0**	feet

Element	n_i	A_i	P_i	R_i	$P_iR_i^{5/3}/n_i$	$P_in_i^2$	$A_in_i^{1.5}$	Q_i	V_i	$V_i^3A_i$
Left Bank	0.020	55.13	14.85	3.71	6,608	0.006	0.156	252	4.58	5,289
Left Channel	0.025	165.27	15.74	10.50	31,699	0.010	0.653	1,211	7.32	64,949
Island	0.040	293.04	35.52	8.25	29,911	0.057	2.344	1,142	3.90	17,357
Right Channel	0.025	90.54	8.59	10.54	17,410	0.005	0.358	665	7.34	35,852
Right bank	0.020	55.55	14.91	3.73	6,676	0.006	0.157	255	4.59	5,370
		659.52	89.61	7.36	92,304	0.084	3.669	3,525		128,817

Average Velocity	5.34	fps
Composite n (Conveyance)	0.027	
Composite n (Force)	0.031	
Composite n (Colbatch)	0.031	
α	1.28	

n used for freeboard eval.	0.030

SCVWD Levee Recertification
Lower Penitencia Creek
Composite Roughness Calculations
*Elevations in ft NAVD
Reach 2
Station 38+50 to 20+40 (rep. xsec 35+40)

Channel Element	Elev	b	SS	n
Upper Left Bank			2.3	0.035
Left Maint Rd	8	12.79		0.025
Lower Left Bank			2.5	0.035
Left Channel	0.65	21.79		0.035
Island	7.0	58.4		0.050
Right Channel	2.3	12.61		0.035
Lower Right Bank	8.2		3	0.035
Upper Right Bank			2	0.035

Total Discharge	**3,525**	cfs
WSEL	**13.0**	feet

Element	n_i	A_i	P_i	R_i	$P_iR_i^{5/3}/n_i$	$P_in_i^2$	$A_in_i^{1.5}$	Q_i	V_i	$V_i^3A_i$
Upper Left Bank	0.035	28.75	12.54	2.29	1,428	0.015	0.188	40	1.39	77
Left Maint Rd	0.025	63.95	12.79	5.00	7,480	0.008	0.253	209	3.27	2,237
Lower Left Bank	0.035	159.40	19.79	8.05	18,300	0.024	1.044	512	3.21	5,274
Left Channel	0.035	269.11	21.79	12.35	41,080	0.027	1.762	1,149	4.27	20,932
Island	0.050	350.40	58.40	6.00	23,140	0.146	3.918	647	1.85	2,207
Right Channel	0.035	134.93	12.61	10.70	18,719	0.015	0.883	523	3.88	7,878
Lower Right Bank	0.035	137.03	18.63	7.36	14,810	0.023	0.897	414	3.02	3,782
Upper Right Bank	0.035	23.14	10.76	2.15	1,102	0.013	0.151	31	1.33	55
		1,166.70	167.30	6.97	126,059	0.272	9.097	3,525		42,442

Average Velocity	3.02	fps
Composite n (Conveyance)	0.034	
Composite n (Force)	0.040	
Composite n (Colbatch)	0.039	
α	1.32	

n used for freeboard eval.	0.038

SCVWD Levee Recertification
Lower Penitencia Creek
Composite Roughness Calculations
*Elevations in ft NAVD
Reach 3
Station 20+40 to 14+50 (rep. xsec 16+40)

Channel Element	Elev	b	SS	n
Upper Left Bank			2	0.030
Left Maint Rd	8.1	14.76		0.025
Lower Left Bank			2	0.035
Left Channel	0.7	22.6		0.030
Island	5.7	74.06		0.050
Right Channel	0.8	17.39		0.030
Lower Right Bank			1.5	0.035
Right Maint Rd	6.9	9.83		0.025
Upper Right Bank			2	0.020

Total Discharge	**3,675**	cfs
WSEL	**13.5**	feet

Element	n_i	A_i	P_i	R_i	$P_iR_i^{5/3}/n_i$	$P_in_i^2$	$A_in_i^{1.5}$	Q_i	V_i	$V_i^3A_i$
Upper Left Bank	0.030	29.16	12.07	2.41	1,750	0.011	0.152	34	1.17	46
Left Maint Rd	0.025	79.70	14.76	5.40	9,813	0.009	0.315	191	2.39	1,093
Lower Left Bank	0.035	134.68	16.55	8.14	15,570	0.020	0.882	303	2.25	1,529
Left Channel	0.030	289.28	22.60	12.80	52,764	0.020	1.503	1,026	3.55	12,899
Island	0.050	576.93	74.06	7.79	45,343	0.185	6.450	882	1.53	2,058
Right Channel	0.030	220.68	17.39	12.69	40,020	0.016	1.147	778	3.53	9,672
Lower Right Bank	0.035	87.91	10.94	8.03	10,075	0.013	0.576	196	2.23	972
Right Maint Rd	0.025	65.07	9.83	6.62	9,177	0.006	0.257	178	2.74	1,341
Upper Right Bank	0.020	43.82	14.80	2.96	4,518	0.006	0.124	88	2.00	353
		1,527.24	193.01	7.91	189,030	0.287	11.405	3,675		29,964

Average Velocity	2.41	fps
Composite n (Conveyance)	0.032	
Composite n (Force)	0.039	
Composite n (Colbatch)	0.038	
α	1.41	

n used for freeboard eval.	0.038

SCVWD Levee Recertification
Lower Penitencia Creek
Composite Roughness Calculations
*Elevations in ft NAVD
Reach 4
Station 14+50 to 1+86 (rep. xsec 10+40)

Channel Element	Elev	b	SS	n
Left Bank			1	0.02
Left Channel	-0.58	27.99		0.03
Right Channel	4.3	27.28		0.04
Right Bank			1.5	0.02

Total Discharge	**3,795**	cfs
WSEL	**12.5**	feet

Element	n_i	A_i	P_i	R_i	$P_iR_i^{5/3}/n_i$	$P_in_i^2$	$A_in_i^{1.5}$	Q_i	V_i	$V_i^3A_i$
Left Bank	0.020	85.54	18.50	4.62	11,872	0.007	0.242	417	4.87	9,901
Left Channel	0.030	366.11	27.99	13.08	67,748	0.025	1.902	2,379	6.50	100,444
Right Channel	0.040	223.70	27.28	8.20	22,741	0.044	1.790	799	3.57	10,176
Right Bank	0.020	50.43	14.78	3.41	5,714	0.006	0.143	201	3.98	3,176
		725.78	88.55	8.20	108,075	0.082	4.077	3,795		123,697

Average Velocity	5.23	fps
Composite n (Conveyance)	0.027	
Composite n (Force)	0.030	
Composite n (Colbatch)	0.032	
α	1.19	

n used for freeboard eval.	0.030

Tab 7

Schaaf & Wheeler
CONSULTING CIVIL ENGINEERS

100 N. Winchester Blvd., Suite 200
Santa Clara, CA 95050
(408) 246-4848
FAX (408) 246-5624
canderson@swsv.com

TECHNICAL MEMORANDUM

PROJECT:	Recertification of Provisionally Accredited Levee P52 in Milpitas, California	DATE:	June 30, 2009
PREPARED:	Charles D. Anderson, PE	JOB #:	SCVW.18.08-003C7
SUBJECT:	Sediment Transport Considerations for Lower Penitencia Creek		

Based on record surveys and experience with past flood events, the bed and banks of Lower Penitencia Creek appear to be relatively stable downstream of its confluence with Berryessa Creek. For example there is no record of any significant erosional damage caused by the storm event of early February 1998, which had an estimated regional return-period of about 80 years based on local streamflow records. The levee slopes generally consist of clayey soils that are well vegetated with grasses and other vegetation and are expected to be resistant to erosion. Sediment aggradation does occur toward the downstream end of the creek, and the source of this aggradation appears to be generally fine sediments carried by Coyote Creek backwater. (Coyote Creek is directly influenced by San Francisco Bay's daily tidal cycle. This deposition is reflected in the most recent field surveys, which have been used to prepare the hydraulic model and evaluate levee freeboard during a one-percent discharge event. Accumulated sediment is routinely removed in accordance with the District's Stream Maintenance Program (Tab 9).

A comparison of several creek cross sections from the 1988 record drawings against the same sections field surveyed in 2008 reveals the relative stream bed stability over 20 years, which include the flood of record in 1998. The 1988 record drawings are on the NGVD29 vertical datum; so the 2008 cross sections have been adjusted from the NAVD88 datum for comparison. The heavy magenta cross sections are from 1988; and the lighter cross sections from 2008.

Following the comparative cross sections and a section location key, the results of a HEC-RAS velocity profile run for the published one-percent discharge used to establish one-percent velocity at the toe of the levee are presented in tabular form. The maximum velocity is 3.8 feet per second, which is not expected to cause severe erosion.

Lower Pen XSEC Verify 82908 Plan: 1) RJA82908 2) Dist82908
River = RIVER-1 Reach = Reach-1 RS = 4640 Actual Sta 4710

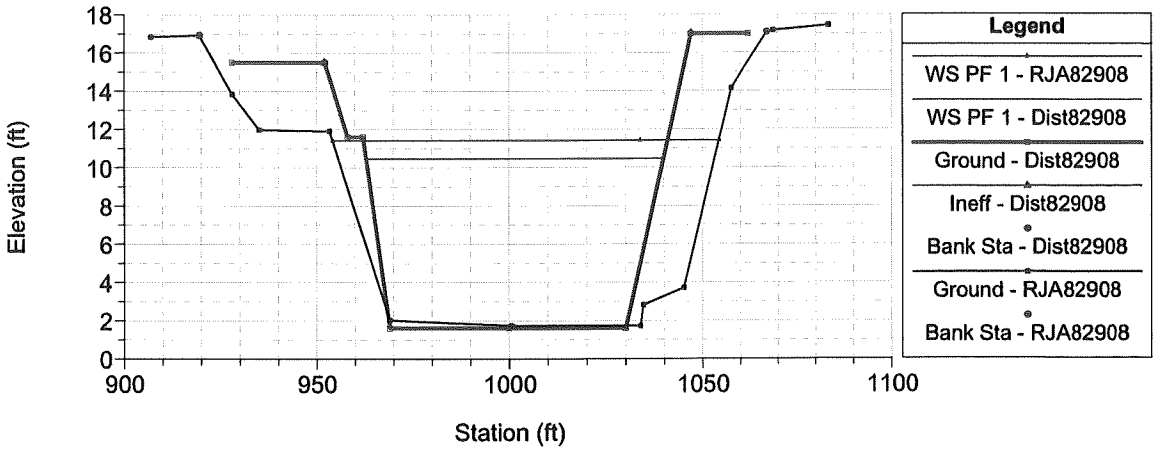

Lower Pen XSEC Verify 82908 Plan: 1) RJA82908 2) Dist82908
River = RIVER-1 Reach = Reach-1 RS = 4035 Actual Sta 4103

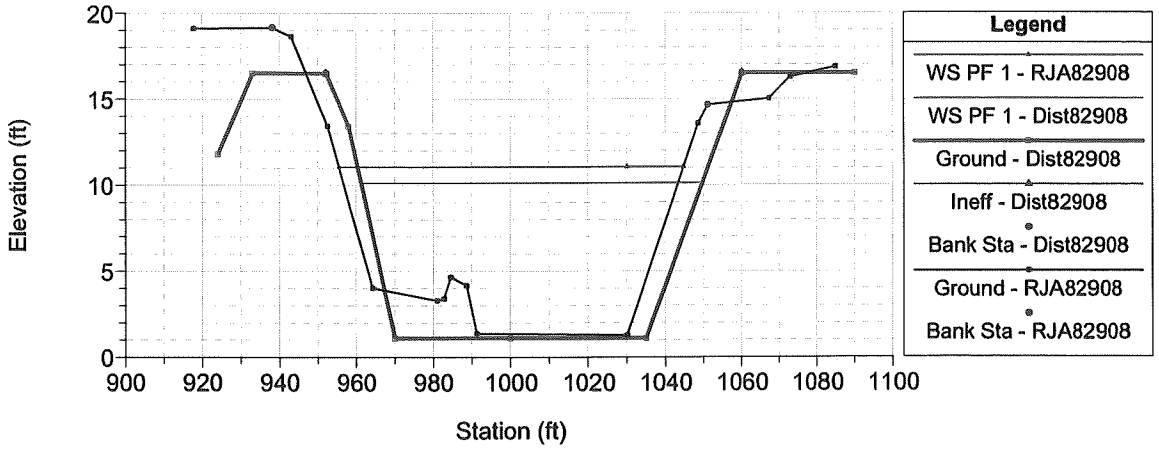

Lower Pen XSEC Verify 82908 Plan: 1) RJA82908 2) Dist82908
River = RIVER-1 Reach = Reach-1 RS = 3540 Actual Sta 3631

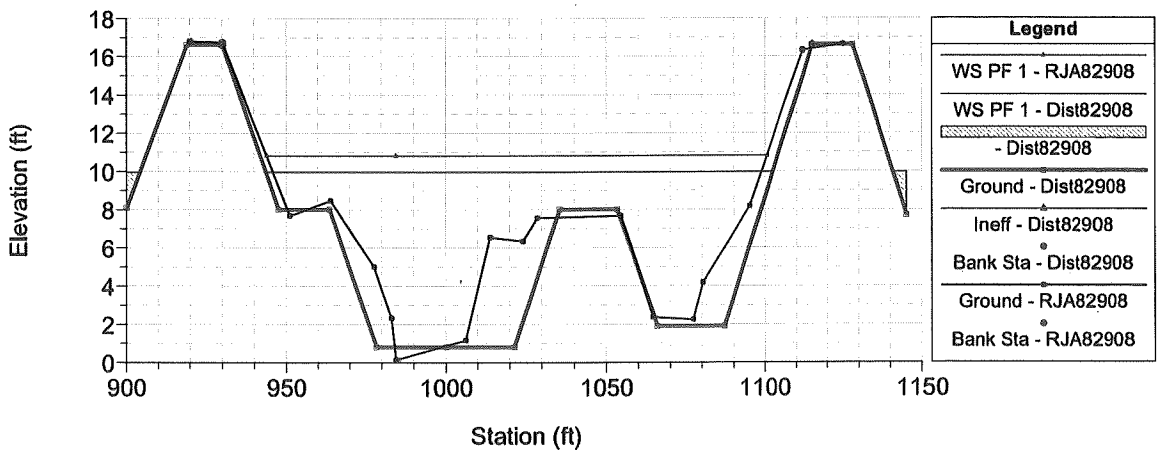

Lower Pen XSEC Verify 82908 Plan: 1) RJA82908 2) Dist82908
River = RIVER-1 Reach = Reach-1 RS = 3026 Actual Sta 3113

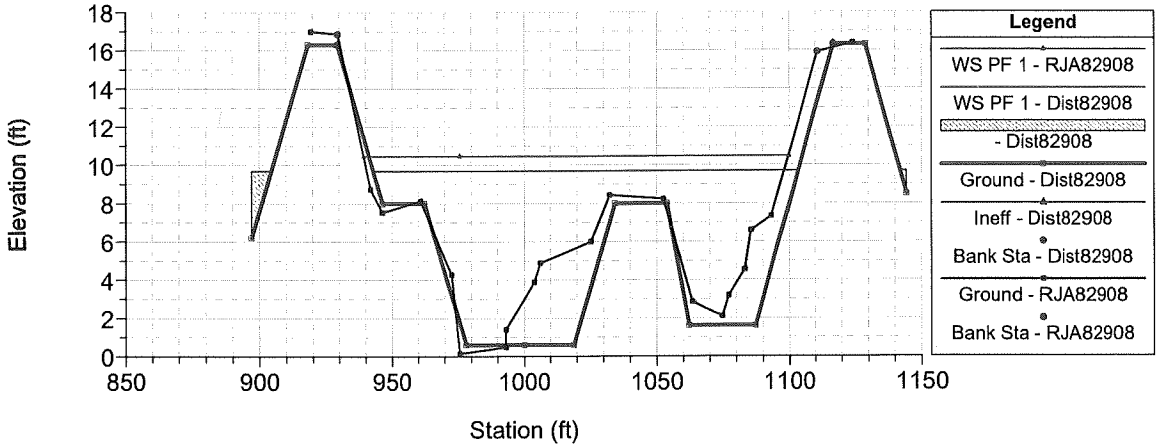

Lower Pen XSEC Verify 82908 Plan: 1) RJA82908 2) Dist82908
River = RIVER-1 Reach = Reach-1 RS = 2540 Actual Sta 2627

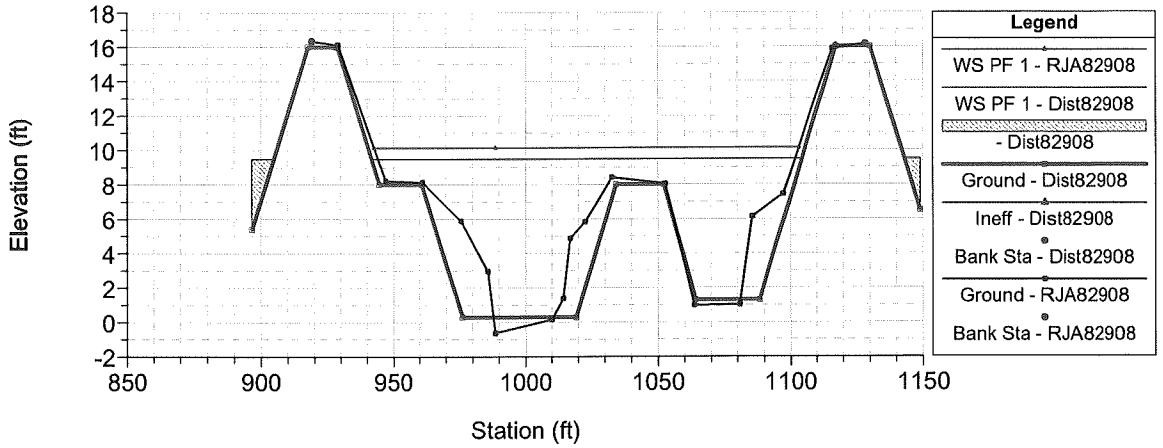

Lower Pen XSEC Verify 82908 Plan: 1) RJA82908 2) Dist82908
River = RIVER-1 Reach = Reach-1 RS = 2040 Actual Sta 2129

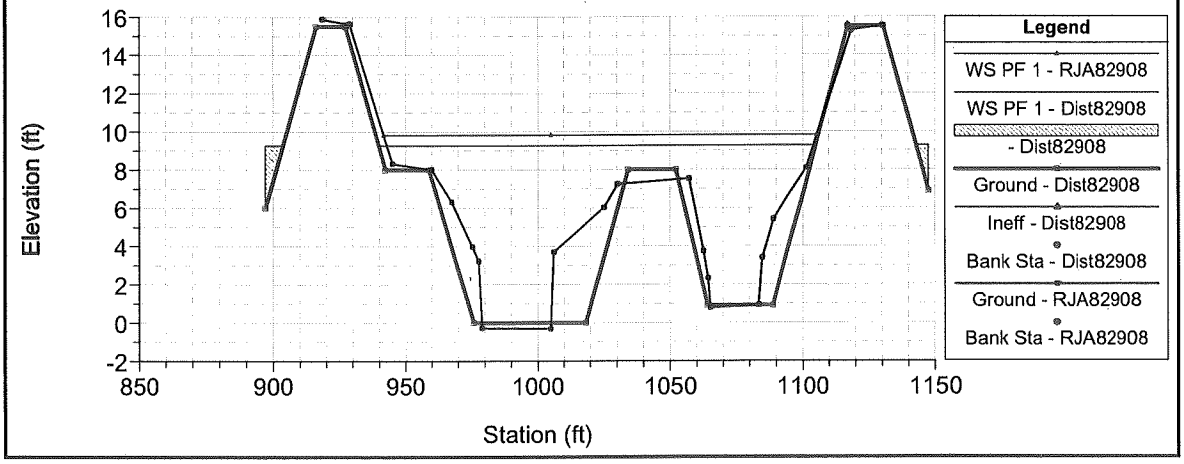

Lower Pen XSEC Verify 82908 Plan: 1) RJA82908 2) Dist82908
River = RIVER-1 Reach = Reach-1 RS = 1640 Actual Sta 1727

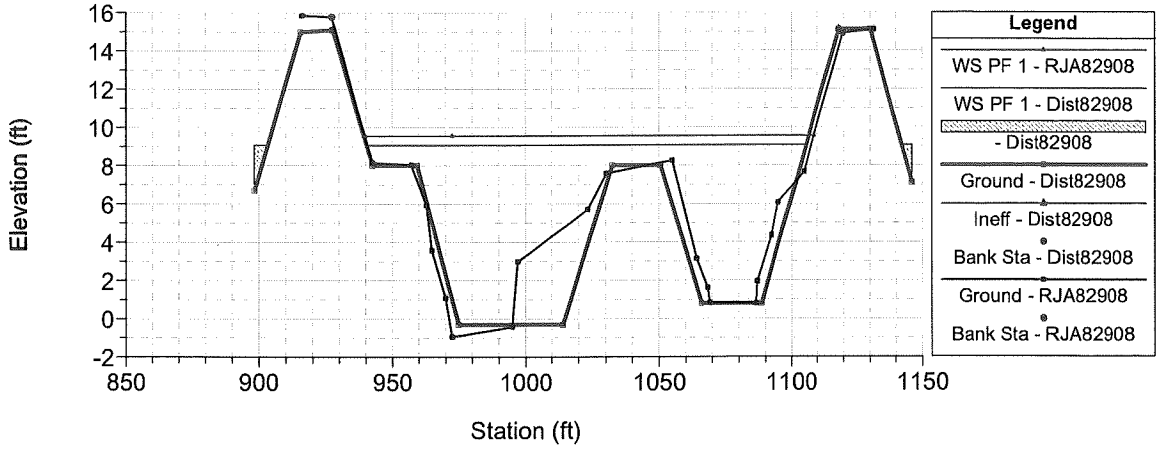

Lower Pen XSEC Verify 82908 Plan: 1) RJA82908 2) Dist82908
River = RIVER-1 Reach = Reach-1 RS = 1040 Actual Sta 1102

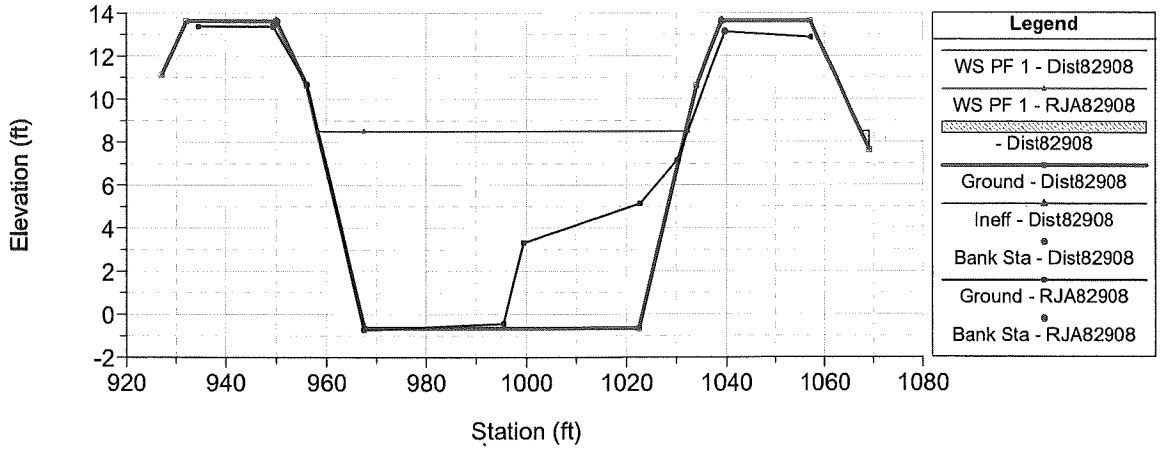

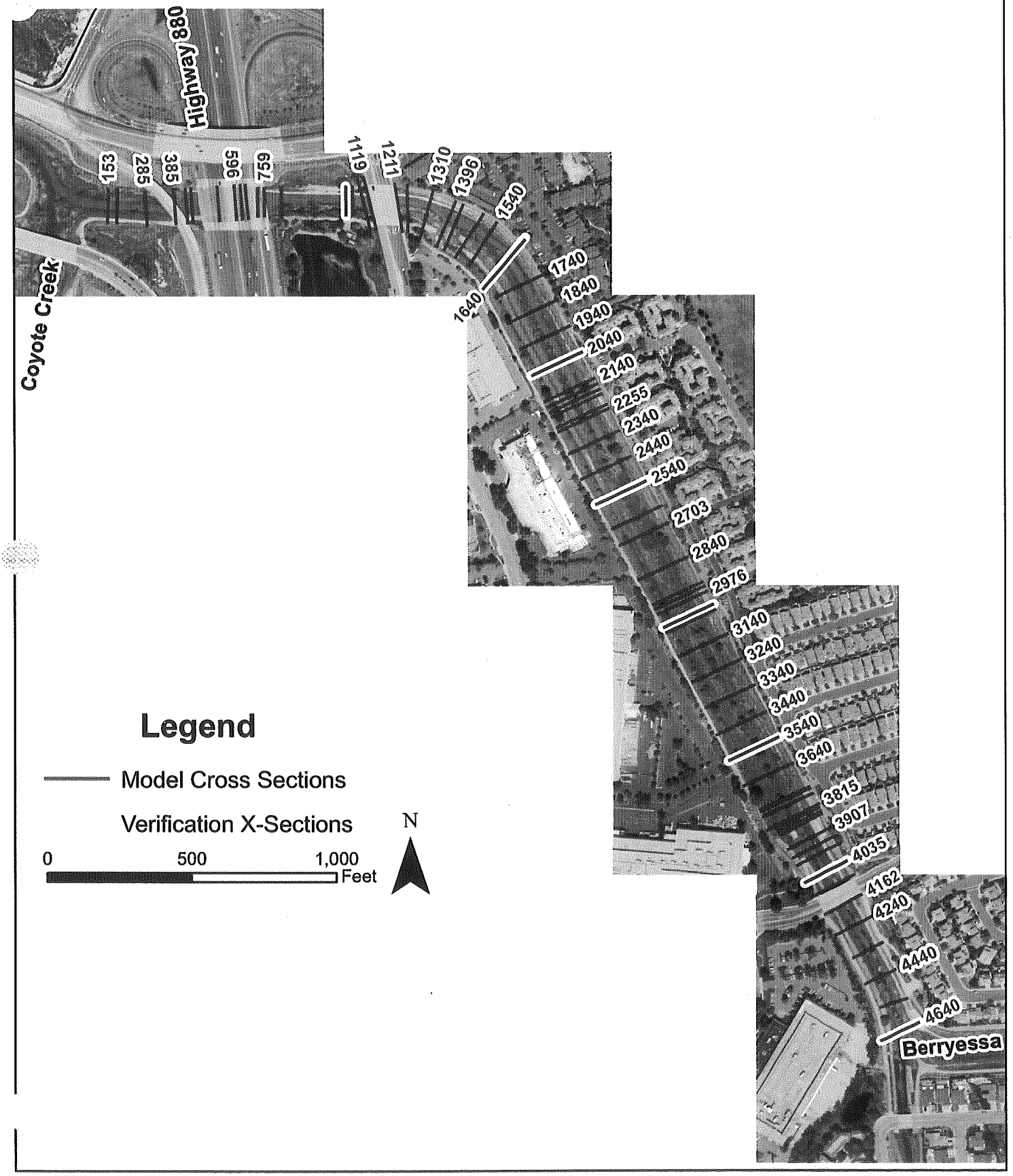
Highway 880
Coyote Creek
153
285
385
596
759
1119
1211
1310
1396
1540
1640
1740
1840
1940
2040
2140
2255
2340
2440
2540
2703
2840
2976
3140
3240
3340
3440
3540
3640
3815
3907
4035
4162
4240
4440
4640
Berryessa
Legend
Model Cross Sections
Verification X-Sections
0
500
1,000
Feet
N

Lower Penitencia Creek Velocities at Toe of Levee	
Station	Levee Velocity (ft/s)
4640	0.92
4440	2.80
4175	3.15
4142	3.15
4104	3.17
4035	3.82
3850	1.52
3540	1.86
3251	1.96
3026	2.00
2810	1.95
2540	1.74
2320	1.91
2040	1.78
1640	1.72
1450	1.17
1350	1.65
1223	3.82

Schaaf & Wheeler
CONSULTING CIVIL ENGINEERS

100 N. Winchester Blvd., Suite 200
Santa Clara, CA 95050
(408) 246-4848
FAX (408) 246-5624
canderson@swsv.com

TECHNICAL MEMORANDUM

PROJECT:	Recertification of Provisionally Accredited Levee P52 in Milpitas, California	DATE:	June 9, 2009
PREPARED:	Charles D. Anderson, PE	JOB #:	SCVW.18.08-003C7
SUBJECT:	Estimated Discharge and Stage Hydrographs for Lower Penitencia Creek		

FEMA and NRCS archives have been unsuccessfully scoured to find the original hydrographs used to perform the flow traces that result in published discharge values for Lower Penitencia Creek. Consequently, the following assumptions have been made to produce the approximate one-percent stage hydrographs required for geotechnical stability analyses:

1. The original Flood Insurance Study (FIS) for Milpitas is of the same general vintage as the original FIS for Mountain View.

2. The published discharge for Lower Penitencia Creek at Nimitz Freeway (3,500 cfs) is roughly two-thirds the published discharge Stevens Creek at U.S. 101 (5,750 cfs).

3. Multiplying the archived (microfiche) hydrograph for Stevens Creek at U.S. 101 by two-thirds provides an approximate hydrograph for Lower Penitencia Creek at Nimitz Freeway.

Stage hydrographs are produced at cross sections of geotechnical interest by running HEC-RAS in unsteady mode using the approximate discharge hydrograph for Lower Penitencia Creek. Normal depth is assumed at the Coyote Creek confluence.

DAY	HR	Q (cfs) - Stevens	Q (cfs) - Lower Pen
1	0:00	0	0
1	0:15	9	6
1	0:30	17	11
1	0:45	57	38
1	1:00	106	71
1	1:15	156	104
1	1:30	208	139
1	1:45	285	190
1	2:00	355	237
1	2:15	432	288
1	2:30	515	343
1	2:45	603	402
1	3:00	689	459
1	3:15	768	512
1	3:30	849	566
1	3:45	932	621
1	4:00	1016	677
1	4:15	1103	735
1	4:30	1225	817
1	4:45	1411	941
1	5:00	1599	1066
1	5:15	1787	1191
1	5:30	1959	1306
1	5:45	2101	1401
1	6:00	2217	1478
1	6:15	2302	1535
1	6:30	2346	1564
1	6:45	2358	1572
1	7:00	2351	1567
1	7:15	2326	1551
1	7:30	2294	1529
1	7:45	2272	1515
1	8:00	2265	1510
1	8:15	2277	1518
1	8:30	2294	1529
1	8:45	2307	1538
1	9:00	2320	1547
1	9:15	2332	1555
1	9:30	2335	1557
1	9:45	2327	1551
1	10:00	2320	1547
1	10:15	2311	1541
1	10:30	2304	1536
1	10:45	2310	1540
1	11:00	2316	1544
1	11:15	2318	1545
1	11:30	2327	1551
1	11:45	2358	1572
1	12:00	2400	1600
1	12:15	2435	1623
1	12:30	2457	1638

DAY	HR	Q (cfs) - Stevens	Q (cfs) - Lower Pen
1	12:45	2463	1642
1	13:00	2468	1645
1	13:15	2499	1666
1	13:30	2558	1705
1	13:45	2637	1758
1	14:00	2737	1825
1	14:15	2848	1899
1	14:30	2917	1945
1	14:45	2918	1945
1	15:00	2914	1943
1	15:15	2950	1967
1	15:30	3013	2009
1	15:45	3076	2051
1	16:00	3144	2096
1	16:15	3241	2161
1	16:30	3346	2231
1	16:45	3415	2277
1	17:00	3459	2306
1	17:15	3527	2351
1	17:30	3716	2477
1	17:45	3797	2531
1	18:00	3972	2648
1	18:15	4262	2841
1	18:30	4643	3095
1	18:45	5025	3350
1	19:00	5378	3585
1	19:15	5654	3769
1	19:30	5753	3835
1	19:45	5722	3815
1	20:00	5689	3793
1	20:15	5663	3775
1	20:30	5636	3757
1	20:45	5614	3743
1	21:00	5600	3733
1	21:15	5591	3727
1	21:30	5579	3719
1	21:45	5564	3709
1	22:00	5568	3712
1	22:15	5576	3717
1	22:30	5579	3719
1	22:45	5576	3717
1	23:00	5571	3714
1	23:15	5570	3713
1	23:30	5565	3710
1	23:45	5557	3705
2	0:00	5557	3705
2	0:15	5511	3674
2	0:30	5308	3539
2	0:45	4973	3315
2	1:00	4619	3079
2	1:15	4287	2858

DAY	HR	Q (cfs) - Stevens	Q (cfs) - Lower Pen
2	1:30	3983	2655
2	1:45	3713	2475
2	2:00	3476	2317
2	2:15	3269	2179
2	2:30	3086	2057
2	2:45	2918	1945
2	3:00	2763	1842
2	3:15	2612	1741
2	3:30	2466	1644
2	3:45	2315	1543
2	4:00	2163	1442
2	4:15	2015	1343
2	4:30	1870	1247
2	4:45	1728	1152
2	5:00	1591	1061
2	5:15	1460	973
2	5:30	1336	891
2	5:45	1220	813
2	6:00	1114	743
2	6:15	1028	685
2	6:30	977	651
2	6:45	931	621
2	7:00	874	583
2	7:15	811	541
2	7:30	749	499
2	7:45	690	460
2	8:00	635	423
2	8:15	585	390
2	8:30	541	361
2	8:45	503	335
2	9:00	471	314
2	9:15	446	297
2	9:30	425	283
2	9:45	409	273
2	10:00	398	265
2	10:15	389	259
2	10:30	382	255
2	10:45	378	252
2	11:00	374	249
2	11:15	372	248
2	11:30	371	247
2	11:45	370	247
2	12:00	369	246
2	12:15	369	246
2	12:30	368	245
2	12:45	368	245
2	13:00	368	245
2	13:15	368	245
2	13:30	368	245
2	13:45	368	245
2	14:00	367	245

DAY	HR	Q (cfs) - Stevens	Q (cfs) - Lower Pen
2	14:15	365	243
2	14:30	361	241
2	14:45	357	238
2	15:00	352	235
2	15:15	346	231
2	15:30	340	227
2	15:45	334	223
2	16:00	327	218
2	16:15	321	214
2	16:30	315	210
2	16:45	309	206
2	17:00	302	201
2	17:15	296	197
2	17:30	290	193
2	17:45	285	190
2	18:00	279	186
2	18:15	273	182
2	18:30	268	179
2	18:45	262	175
2	19:00	257	171
2	19:15	252	168
2	19:30	247	165
2	19:45	242	161
2	20:00	237	158
2	20:15	233	155
2	20:30	228	152
2	20:45	223	149
2	21:00	219	146
2	21:15	215	143
2	21:30	210	140
2	21:45	206	137
2	22:00	202	135
2	22:15	198	132
2	22:30	194	129
2	22:45	190	127
2	23:00	186	124
2	23:15	183	122

Recertification of Provisionally Accredited Levee P52
Lower Penitencia Creek in Milpitas, CA

Summary of Discharge Duration

flowing water:	1 days, 22 hrs, 45 minutes
5 ft deep:	1 days, 1 hrs, 30 minutes
10 ft deep:	0 days, 6 hrs, 00 minutes

Time	Section 1640 W.S. Elev (ft)	SECTION 3026 W.S. Elev (ft)	Section 4440 W.S. Elev (ft)	Depth (ft)	Depth Intervals (ft)
11/20/98 0:00	5.22	5.23	5.24	0	0
11/20/98 0:15	5.24	5.24	5.26	0	0
11/20/98 0:30	5.27	5.28	5.33	0.04	0
11/20/98 0:45	5.37	5.41	5.65	0.17	0
11/20/98 1:00	5.52	5.61	6.05	0.37	0
11/20/98 1:15	5.76	5.91	6.47	0.67	0
11/20/98 1:30	6.09	6.27	6.86	1.03	0
11/20/98 1:45	6.47	6.69	7.3	1.45	0
11/20/98 2:00	6.82	7.08	7.69	1.84	0
11/20/98 2:15	7.19	7.48	8.09	2.24	0
11/20/98 2:30	7.54	7.85	8.45	2.61	0
11/20/98 2:45	7.88	8.22	8.8	2.98	0
11/20/98 3:00	8.22	8.57	9.13	3.33	0
11/20/98 3:15	8.52	8.89	9.44	3.65	0
11/20/98 3:30	8.8	9.18	9.72	3.94	0
11/20/98 3:45	9.05	9.45	9.98	4.21	0
11/20/98 4:00	9.25	9.68	10.21	4.44	0
11/20/98 4:15	9.44	9.88	10.43	4.64	0
11/20/98 4:30	9.66	10.13	10.7	4.89	0
11/20/98 4:45	9.96	10.47	11.08	5.23	5
11/20/98 5:00	10.29	10.84	11.45	5.6	5
11/20/98 5:15	10.53	11.17	11.77	5.93	5
11/20/98 5:30	10.78	11.44	12.05	6.2	5
11/20/98 5:45	11.05	11.68	12.28	6.44	5
11/20/98 6:00	11.3	11.9	12.47	6.66	5
11/20/98 6:15	11.49	12.07	12.63	6.83	5
11/20/98 6:30	11.65	12.2	12.73	6.96	5
11/20/98 6:45	11.74	12.28	12.8	7.04	5
11/20/98 7:00	11.78	12.31	12.82	7.07	5
11/20/98 7:15	11.78	12.31	12.8	7.07	5
11/20/98 7:30	11.75	12.28	12.78	7.04	5
11/20/98 7:45	11.71	12.25	12.75	7.01	5
11/20/98 8:00	11.69	12.23	12.73	6.99	5
11/20/98 8:15	11.68	12.22	12.73	6.98	5
11/20/98 8:30	11.7	12.24	12.75	7	5
11/20/98 8:45	11.72	12.25	12.77	7.01	5
11/20/98 9:00	11.74	12.27	12.78	7.03	5
11/20/98 9:15	11.76	12.29	12.8	7.05	5
11/20/98 9:30	11.77	12.3	12.82	7.06	5

Recertification of Provisionally Accredited Levee P52
Lower Penitencia Creek in Milpitas, CA

Summary of Discharge Duration

flowing water:	1 days, 22 hrs, 45 minutes
5 ft deep:	1 days, 1 hrs, 30 minutes
10 ft deep:	0 days, 6 hrs, 00 minutes

Time	Section 1640 W.S. Elev (ft)	SECTION 3026 W.S. Elev (ft)	Section 4440 W.S. Elev (ft)	Depth (ft)	Depth Intervals (ft)
11/20/98 9:45	11.77	12.3	12.81	7.06	5
11/20/98 10:00	11.76	12.29	12.8	7.05	5
11/20/98 10:15	11.75	12.28	12.78	7.04	5
11/20/98 10:30	11.73	12.27	12.77	7.03	5
11/20/98 10:45	11.73	12.27	12.78	7.03	5
11/20/98 11:00	11.74	12.28	12.79	7.04	5
11/20/98 11:15	11.75	12.28	12.79	7.04	5
11/20/98 11:30	11.76	12.29	12.8	7.05	5
11/20/98 11:45	11.79	12.32	12.83	7.08	5
11/20/98 12:00	11.84	12.37	12.88	7.13	5
11/20/98 12:15	11.89	12.42	12.93	7.18	5
11/20/98 12:30	11.94	12.46	12.97	7.22	5
11/20/98 12:45	11.97	12.48	12.98	7.24	5
11/20/98 13:00	11.98	12.5	12.99	7.26	5
11/20/98 13:15	12.02	12.53	13.03	7.29	5
11/20/98 13:30	12.08	12.59	13.1	7.35	5
11/20/98 13:45	12.18	12.68	13.19	7.44	5
11/20/98 14:00	12.3	12.8	13.3	7.56	5
11/20/98 14:15	12.44	12.93	13.43	7.69	5
11/20/98 14:30	12.55	13.03	13.52	7.79	5
11/20/98 14:45	12.61	13.09	13.57	7.85	5
11/20/98 15:00	12.63	13.11	13.58	7.87	5
11/20/98 15:15	12.67	13.14	13.62	7.9	5
11/20/98 15:30	12.73	13.2	13.69	7.96	5
11/20/98 15:45	12.81	13.28	13.76	8.04	5
11/20/98 16:00	12.88	13.35	13.82	8.11	5
11/20/98 16:15	12.98	13.45	13.92	8.21	5
11/20/98 16:30	13.09	13.56	14.03	8.32	5
11/20/98 16:45	13.19	13.65	14.12	8.41	5
11/20/98 17:00	13.27	13.73	14.2	8.49	5
11/20/98 17:15	13.35	13.8	14.26	8.56	5
11/20/98 17:30	13.49	13.95	14.41	8.71	5
11/20/98 17:45	13.62	14.07	14.53	8.83	5
11/20/98 18:00	13.78	14.23	14.69	8.99	5
11/20/98 18:15	14.02	14.47	14.93	9.23	5
11/20/98 18:30	14.35	14.79	15.25	9.55	5
11/20/98 18:45	14.7	15.14	15.59	9.9	5
11/20/98 19:00	15.05	15.49	15.92	10.25	10
11/20/98 19:15	15.36	15.79	16.21	10.55	10

Recertification of Provisionally Accredited Levee P52
Lower Penitencia Creek in Milpitas, CA

Summary of Discharge Duration

flowing water:	1 days, 22 hrs, 45 minutes
5 ft deep:	1 days, 1 hrs, 30 minutes
10 ft deep:	0 days, 6 hrs, 00 minutes

Time	Section 1640 W.S. Elev (ft)	SECTION 3026 W.S. Elev (ft)	Section 4440 W.S. Elev (ft)	Depth (ft)	Depth Intervals (ft)
11/20/98 19:30	15.55	15.97	16.38	10.73	10
11/20/98 19:45	15.64	16.05	16.45	10.81	10
11/20/98 20:00	15.65	16.06	16.46	10.82	10
11/20/98 20:15	15.62	16.04	16.43	10.8	10
11/20/98 20:30	15.6	16.02	16.41	10.78	10
11/20/98 20:45	15.58	16	16.39	10.76	10
11/20/98 21:00	15.56	15.98	16.37	10.74	10
11/20/98 21:15	15.55	15.96	16.36	10.72	10
11/20/98 21:30	15.53	15.95	16.34	10.71	10
11/20/98 21:45	15.52	15.94	16.33	10.7	10
11/20/98 22:00	15.52	15.94	16.34	10.7	10
11/20/98 22:15	15.53	15.95	16.35	10.71	10
11/20/98 22:30	15.54	15.95	16.36	10.71	10
11/20/98 22:45	15.54	15.95	16.35	10.71	10
11/20/98 23:00	15.53	15.95	16.35	10.71	10
11/20/98 23:15	15.53	15.94	16.34	10.7	10
11/20/98 23:30	15.52	15.94	16.34	10.7	10
11/20/98 23:45	15.52	15.93	16.33	10.69	10
11/21/98 0:00	15.52	15.93	16.33	10.69	10
11/21/98 0:15	15.49	15.91	16.31	10.67	10
11/21/98 0:30	15.38	15.79	16.19	10.55	10
11/21/98 0:45	15.16	15.57	15.96	10.33	10
11/21/98 1:00	14.87	15.28	15.67	10.04	10
11/21/98 1:15	14.56	14.97	15.36	9.73	5
11/21/98 1:30	14.24	14.65	15.05	9.41	5
11/21/98 1:45	13.93	14.35	14.75	9.11	5
11/21/98 2:00	13.63	14.06	14.47	8.82	5
11/21/98 2:15	13.37	13.8	14.22	8.56	5
11/21/98 2:30	13.12	13.56	13.99	8.32	5
11/21/98 2:45	12.89	13.34	13.77	8.1	5
11/21/98 3:00	12.67	13.13	13.57	7.89	5
11/21/98 3:15	12.47	12.93	13.37	7.69	5
11/21/98 3:30	12.26	12.73	13.18	7.49	5
11/21/98 3:45	12.04	12.52	12.97	7.28	5
11/21/98 4:00	11.8	12.3	12.76	7.06	5
11/21/98 4:15	11.56	12.08	12.54	6.84	5
11/21/98 4:30	11.31	11.85	12.32	6.61	5
11/21/98 4:45	11.06	11.62	12.09	6.38	5
11/21/98 5:00	10.81	11.39	11.87	6.15	5

Recertification of Provisionally Accredited Levee P52
Lower Penitencia Creek in Milpitas, CA

Summary of Discharge Duration

flowing water:	1 days, 22 hrs, 45 minutes
5 ft deep:	1 days, 1 hrs, 30 minutes
10 ft deep:	0 days, 6 hrs, 00 minutes

Time	Section 1640 W.S. Elev (ft)	SECTION 3026 W.S. Elev (ft)	Section 4440 W.S. Elev (ft)	Depth (ft)	Depth Intervals (ft)
11/21/98 5:15	10.59	11.16	11.64	5.92	5
11/21/98 5:30	10.45	10.96	11.43	5.72	5
11/21/98 5:45	10.28	10.75	11.21	5.51	5
11/21/98 6:00	10.08	10.52	10.97	5.28	5
11/21/98 6:15	9.87	10.28	10.72	5.04	5
11/21/98 6:30	9.69	10.09	10.53	4.85	0
11/21/98 6:45	9.53	9.92	10.36	4.68	0
11/21/98 7:00	9.37	9.75	10.19	4.51	0
11/21/98 7:15	9.23	9.6	10.02	4.36	0
11/21/98 7:30	9.1	9.45	9.86	4.21	0
11/21/98 7:45	8.97	9.3	9.7	4.06	0
11/21/98 8:00	8.83	9.14	9.53	3.9	0
11/21/98 8:15	8.68	8.97	9.35	3.73	0
11/21/98 8:30	8.53	8.81	9.19	3.57	0
11/21/98 8:45	8.39	8.66	9.03	3.42	0
11/21/98 9:00	8.26	8.52	8.89	3.28	0
11/21/98 9:15	8.14	8.4	8.76	3.16	0
11/21/98 9:30	8.03	8.28	8.65	3.04	0
11/21/98 9:45	7.94	8.18	8.56	2.94	0
11/21/98 10:00	7.85	8.1	8.47	2.86	0
11/21/98 10:15	7.78	8.03	8.41	2.79	0
11/21/98 10:30	7.73	7.97	8.36	2.73	0
11/21/98 10:45	7.69	7.94	8.33	2.7	0
11/21/98 11:00	7.66	7.9	8.3	2.66	0
11/21/98 11:15	7.64	7.88	8.28	2.64	0
11/21/98 11:30	7.62	7.86	8.26	2.62	0
11/21/98 11:45	7.61	7.85	8.25	2.61	0
11/21/98 12:00	7.6	7.84	8.25	2.6	0
11/21/98 12:15	7.6	7.84	8.24	2.6	0
11/21/98 12:30	7.59	7.83	8.24	2.59	0
11/21/98 12:45	7.59	7.83	8.24	2.59	0
11/21/98 13:00	7.59	7.83	8.24	2.59	0
11/21/98 13:15	7.59	7.83	8.24	2.59	0
11/21/98 13:30	7.59	7.83	8.24	2.59	0
11/21/98 13:45	7.59	7.83	8.24	2.59	0
11/21/98 14:00	7.59	7.83	8.24	2.59	0
11/21/98 14:15	7.58	7.82	8.23	2.58	0
11/21/98 14:30	7.58	7.81	8.21	2.57	0
11/21/98 14:45	7.56	7.8	8.19	2.56	0

Recertification of Provisionally Accredited Levee P52
Lower Penitencia Creek in Milpitas, CA

Summary of Discharge Duration

flowing water:	1 days, 22 hrs, 45 minutes
5 ft deep:	1 days, 1 hrs, 30 minutes
10 ft deep:	0 days, 6 hrs, 00 minutes

Time	Section 1640 W.S. Elev (ft)	SECTION 3026 W.S. Elev (ft)	Section 4440 W.S. Elev (ft)	Depth (ft)	Depth Intervals (ft)
11/21/98 15:00	7.55	7.78	8.18	2.54	0
11/21/98 15:15	7.53	7.76	8.16	2.52	0
11/21/98 15:30	7.51	7.73	8.13	2.49	0
11/21/98 15:45	7.48	7.71	8.1	2.47	0
11/21/98 16:00	7.45	7.68	8.07	2.44	0
11/21/98 16:15	7.43	7.65	8.04	2.41	0
11/21/98 16:30	7.4	7.62	8.01	2.38	0
11/21/98 16:45	7.37	7.59	7.98	2.35	0
11/21/98 17:00	7.35	7.56	7.94	2.32	0
11/21/98 17:15	7.32	7.53	7.91	2.29	0
11/21/98 17:30	7.3	7.5	7.88	2.26	0
11/21/98 17:45	7.27	7.47	7.85	2.23	0
11/21/98 18:00	7.25	7.44	7.82	2.2	0
11/21/98 18:15	7.22	7.42	7.78	2.18	0
11/21/98 18:30	7.2	7.39	7.75	2.15	0
11/21/98 18:45	7.17	7.36	7.72	2.12	0
11/21/98 19:00	7.14	7.33	7.69	2.09	0
11/21/98 19:15	7.12	7.3	7.66	2.06	0
11/21/98 19:30	7.09	7.28	7.63	2.04	0
11/21/98 19:45	7.07	7.25	7.6	2.01	0
11/21/98 20:00	7.04	7.22	7.57	1.98	0
11/21/98 20:15	7.02	7.19	7.54	1.95	0
11/21/98 20:30	6.99	7.16	7.51	1.92	0
11/21/98 20:45	6.97	7.14	7.48	1.9	0
11/21/98 21:00	6.94	7.11	7.45	1.87	0
11/21/98 21:15	6.92	7.08	7.42	1.84	0
11/21/98 21:30	6.89	7.05	7.39	1.81	0
11/21/98 21:45	6.87	7.03	7.36	1.79	0
11/21/98 22:00	6.84	7	7.34	1.76	0
11/21/98 22:15	6.82	6.98	7.31	1.74	0
11/21/98 22:30	6.8	6.95	7.28	1.71	0
11/21/98 22:45	6.78	6.93	7.26	1.69	0
11/21/98 23:00	6.76	6.91	7.23	1.67	0
11/21/98 23:15	6.74	6.89	7.21	1.65	0
MAX WS	15.65	16.06	16.46	10.82	10

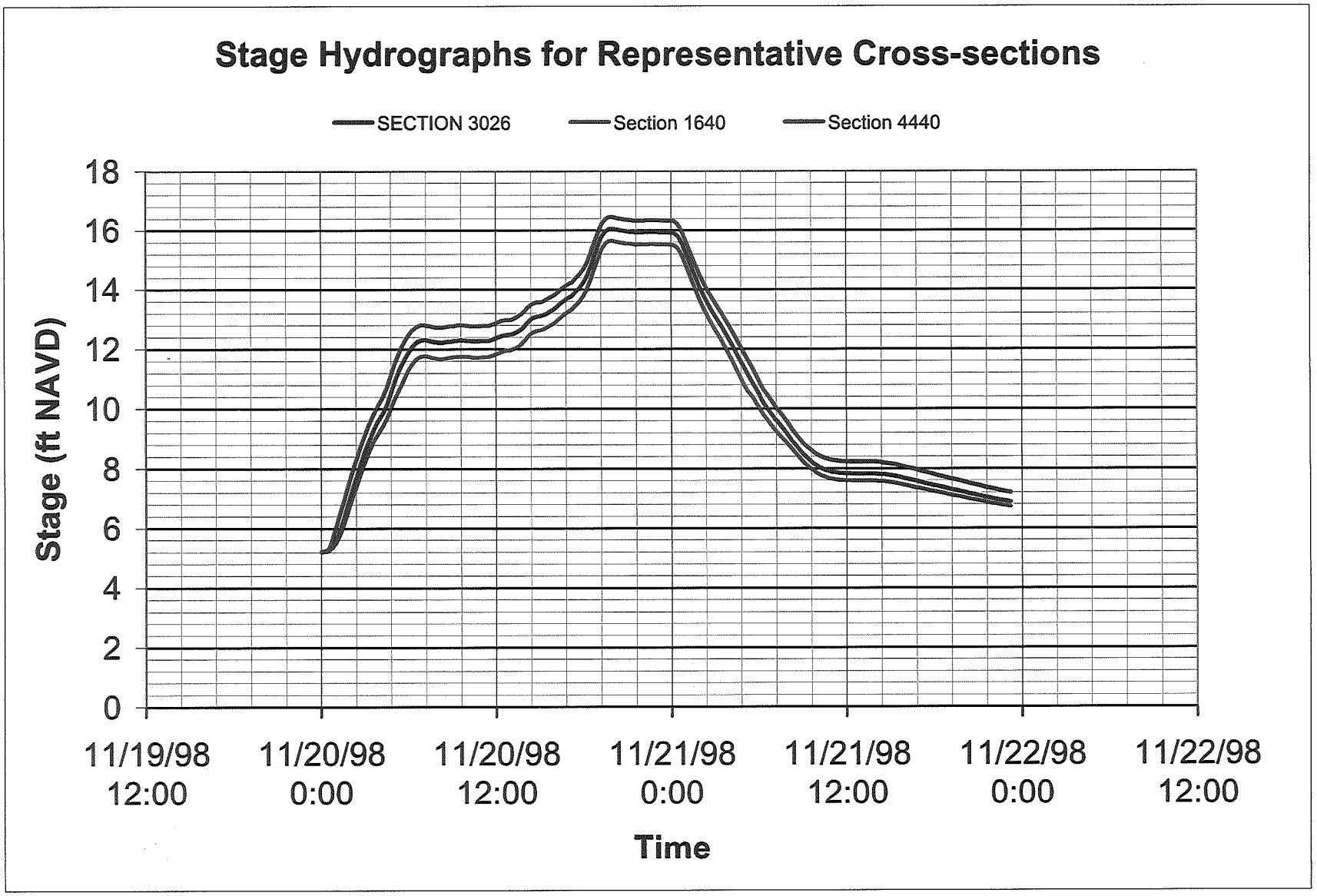
Stage Hydrographs for Representative Cross-sections
SECTION 3026
Section 1640
Section 4440
Stage (ft NAVD)
18
16
14
12
10
8
6
4
2
0
11/19/98 12:00
11/20/98 0:00
11/20/98 12:00
11/21/98 0:00
11/21/98 12:00
11/22/98 0:00
11/22/98 12:00
Time

Tab 8

RESIDUAL INTERIOR DRAINAGE ANALYSIS

for

LOWER PENITENCIA CREEK EAST BANK LEVEE RECERTIFICATION

MILPITAS, CALIFORNIA

Prepared

May 2009

For:

Santa Clara Valley Water District
City of Milpitas

Under the Direct Supervision of:

REGISTERED PROFESSIONAL ENGINEER
CHARLES D. ANDERSON
No. 43776
EXP. 6/30/11
CIVIL
STATE OF CALIFORNIA

CHARLES D. ANDERSON, RCE No. 43776, Exp 6/30/11

Schaaf & Wheeler
CONSULTING CIVIL ENGINEERS

100 N. Winchester Blvd., Suite 200
Santa Clara, CA 95050
(408) 246-4848
FAX (408) 246-5624

Interior Drainage Analysis for Lower Penitencia Creek East Bank Levee Recertification
City of Milpitas, California (Community No. 060344)

INTRODUCTION

This interior drainage analysis for the subject levee recertification has been completed in accordance with Paragraph 65.10(b)(6) of the National Flood Insurance Program (NFIP) regulations:

> "An analysis must be submitted that identifies the source(s) of [interior] flooding, the extent of the flooded area, and, if the average depth is greater than one foot, the water-surface elevation(s) of the base flood. This analysis must be based on the joint probability of interior and exterior flooding and the capacity of facilities (such as drainage lines and pumps) for evacuating interior flood waters."

Limits of Detailed Study. This analysis encompasses areas interior to the east bank levee of Lower Penitencia Creek within the City of Milpitas, California between Interstate 880 and the confluence with Berryessa Creek; or the reach of Lower Penitencia Creek subject to Provisional Accreditation as indicated on Figure 1.

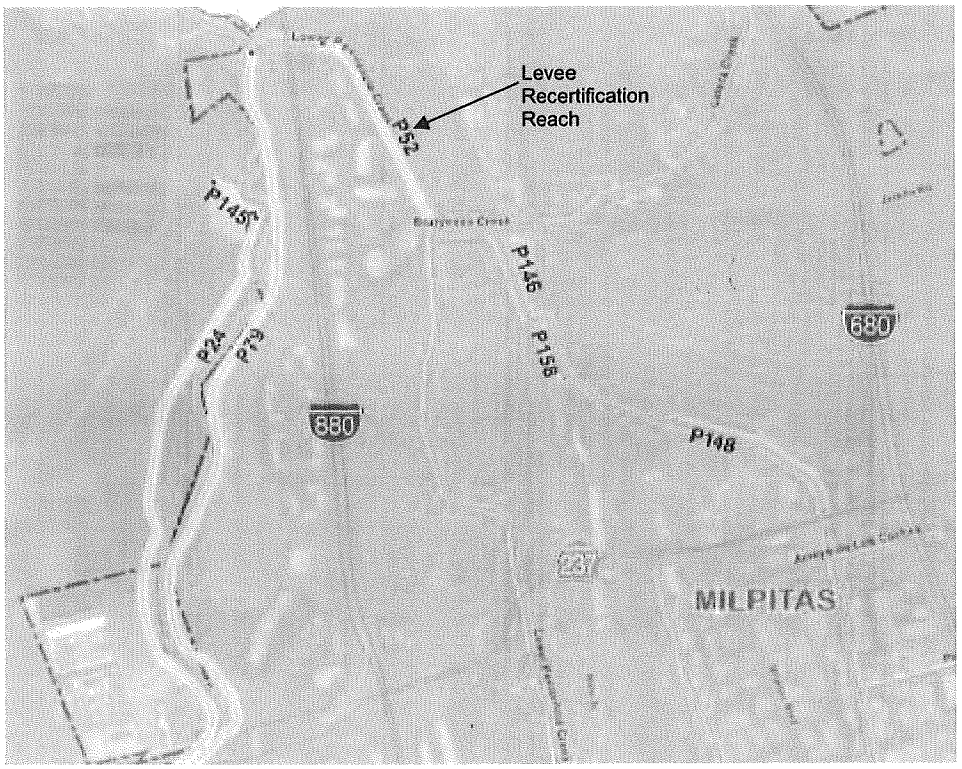

Figure 1. Location of Interior Drainage Analysis

Summary of Residual Interior Flooding. The interior drainage analysis contained herein demonstrates that there is residual one-percent interior flooding for the subject reach of levee recertification. The interior drainage analysis contained herein indicates that this special flood hazard is Zone AH at elevation 12 feet NAVD.

BACKGROUND

The Santa Clara Valley Water District (District) has co-signed a PAL agreement to re-certify the east bank levee of Lower Penitencia Creek within the City of Milpitas (City). The District and City are participating in FEMA's Map Modernization Program (MapMod) to reflect the current reality of the natural and man-made environments as they relate to flood hazards. District and City participation in MapMod includes the accreditation of District levees that provide protection from the base flood, that is, the one percent annual chance flood also referred to as the "100-year flood." Certain levees believed to meet federal standards for levee performance – as listed in the Code of Federal Regulations, Title 44, Section 65 (44 CFR §65) – are thought to be eligible as Provisionally Accredited Levees (PAL) and are currently shown as providing one-percent flood protection on Flood Insurance Rate Maps (FIRMs).

To receive FEMA accreditation, the levee must be shown to conform to the requirements of 44 CFR §65.10 as indicated by the terms of the Provisionally Accredited Levee Program (PAL):

> "To the best of [the District's and City's the [subject] levee...meets the requirements of 44 CFR 65.10 and has been maintained in accordance with an adopted operation and maintenance plan and records of levee maintenance and operation, as well as tests of the mechanized interior drainage system if applicable....."

AREA INTERIOR TO LEVEE RECERTIFICATION REACH

An interior drainage area is defined as that area protected from one-percent flooding by the subject levee reach. This area is delineated by using the water surface profile computed to evaluate freeboard requirements, and extending the base flood elevations to daylight assuming that the subject levee does not exist. Figure 2 shows the limits of one-percent flooding if the east bank levee were not certified. In general the area protected from one-percent flooding by the levee extends from Lower Penitencia Creek east to the Union Pacific Railroad, between Dixon Landing Road on the north and nearly to Berryessa Creek on the south.

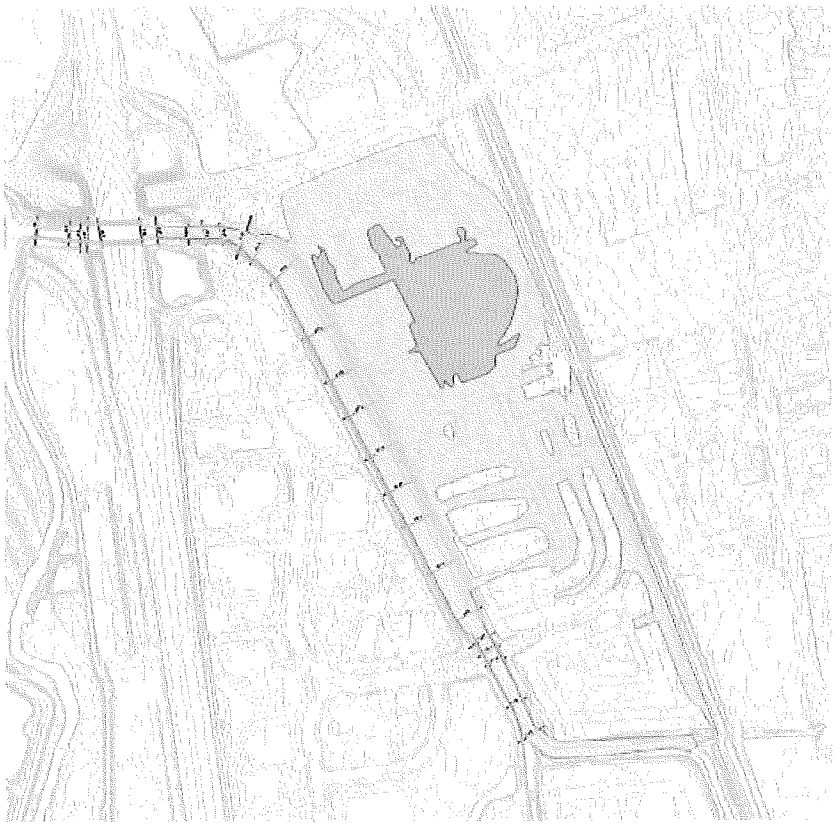

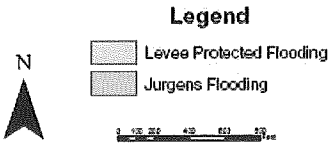

Figure 2.
Interior Drainage Area

DRAINAGE FACILITIES

Based on the City of Milpitas Storm Drain Master Plan (Schaaf & Wheeler 2001), there is only one storm drain outfall to the east bank of Lower Penitencia Creek between Berryessa Creek and Interstate 880 (Figure 3). The 72-inch diameter outfall discharges storm water runoff from the Jurgens Pump Station, which is owned and operated by the City.

Located in the California Landing Park, this facility drains mixed residential areas between Lower Penitencia Creek and Interstate 680 at the northern end of Milpitas. The system was designed to function in tandem with detention storage available in the park itself, since the pump station is undersized even for large runoff events. The station is equipped with four automated 60 hp diesel engine-driven 16,000 gpm axial flow pumps with a total station capacity of 143 cfs.

It should be noted that in response to flooding during the February 3, 1998 storm event, the City flood-proofed the pump station by sealing all floor openings and raising essential control equipment above the then-calculated base flood elevation of 12.5 feet NAVD.

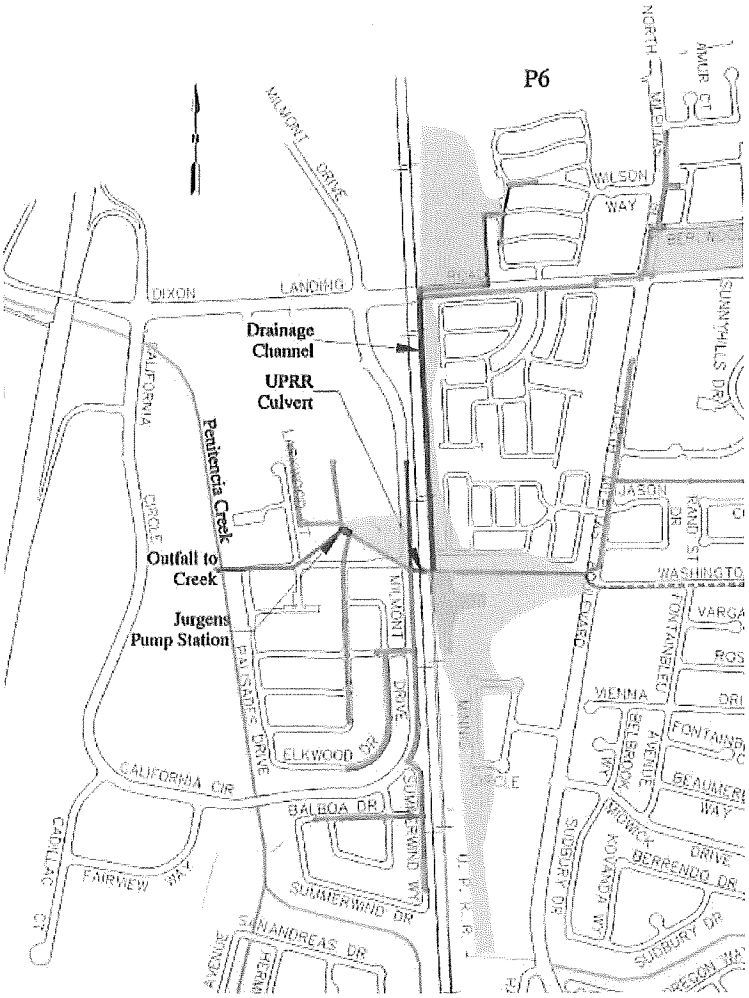

Figure 3.
Drainage to Jurgens Pump Station

METHODOLOGY

According to §65.10(d), the interior drainage study must be based on "the joint probability of interior and exterior flooding." FEMA and NRCS archives have been unsuccessfully scoured to find the original hydrographs used to perform the flow traces that result in published discharge values for Lower Penitencia Creek. Therefore residual interior flooding areas have been delineated assuming that Jurgens Pump Station capacity is largely independent of the timing of the Lower Penitencia Creek flood wave. The basic methodology, consistent with the Milpitas Storm Drain Master Plan, used herein is to:

1. Assume the one-percent intensity-duration-frequency curve and balanced storm pattern published in the Santa Clara County Drainage Manual.

2. Use the IDF curve and rational method to route runoff through the tributary storm drain system. Calculate total time of concentration at the pump station inlet.
3. Use the balanced storm pattern and Antecedent Moisture Conditions (AMC) calibrated to that storm pattern from the Drainage Manual to calculate the interior storm water runoff hydrographs at the pump station inlet using District procedures.
4. Route runoff hydrographs through drainage facilities at California Landing Park using topographic information from the 2006 Santa Clara County LiDAR survey. Ascertain whether there is residual ponding; and if so, map any ponding greater than one foot in depth.

Design Storm. 100-year, 24-hour precipitation patterns and total storm depth are obtained from the Santa Clara County Drainage Manual. (Schaaf & Wheeler 2007) Precipitation patterns and total depth are related to the mean annual precipitation. Unit hydrograph computations rely upon the Rational Method for calculating times of concentration, and the balanced Intensity-Duration-Frequency (IDF) curve used to compute time of concentration is also consistent with the Drainage Manual's hyetograph.

Table 1 provides a calculation of one-percent, 24-hour rainfall depth using local depth-duration-frequency rainfall statistics provided by the Santa Clara Valley Water District as described in Section 3.5 of the Drainage Manual. Figure 4 depicts the corresponding balanced rainfall pattern from the Drainage Manual. Figure 5 provides the intensity-duration-frequency curve for the local mean annual precipitation of 16 inches. The TDS equation is:

$$x_{T,D} = A_{T,D} + B_{T,D}\ MAP$$

where $x_{T,D}$ is the precipitation depth for a specific return period and storm duration (inches)

T is the return period (years)

D is the storm duration (hours)

A, B are dimensionless coefficients from Table B-2 of Santa Clara County Drainage Manual (see Appendix A)

MAP is the Mean Annual Precipition (inches) from Figure A-2 of Santa Clara County Drainage Manual (see Appendix A)

Table 1. Rainfall Depths for 24-hour Balanced Storm

MAP =		16	inches		
Duration (minutes)	**Duration (hours)**	**A**	**B**	**Depth (in)**	**Intensity (in/hr)**
15	0.25	0.4214	0.0070	0.53	2.12
60	1.00	0.6266	0.0192	0.93	0.93
120	2.00	0.7329	0.0362	1.31	0.66
360	6.00	0.7767	0.1011	2.39	0.40
1440	24.00	0.8140	0.2434	4.71	0.20

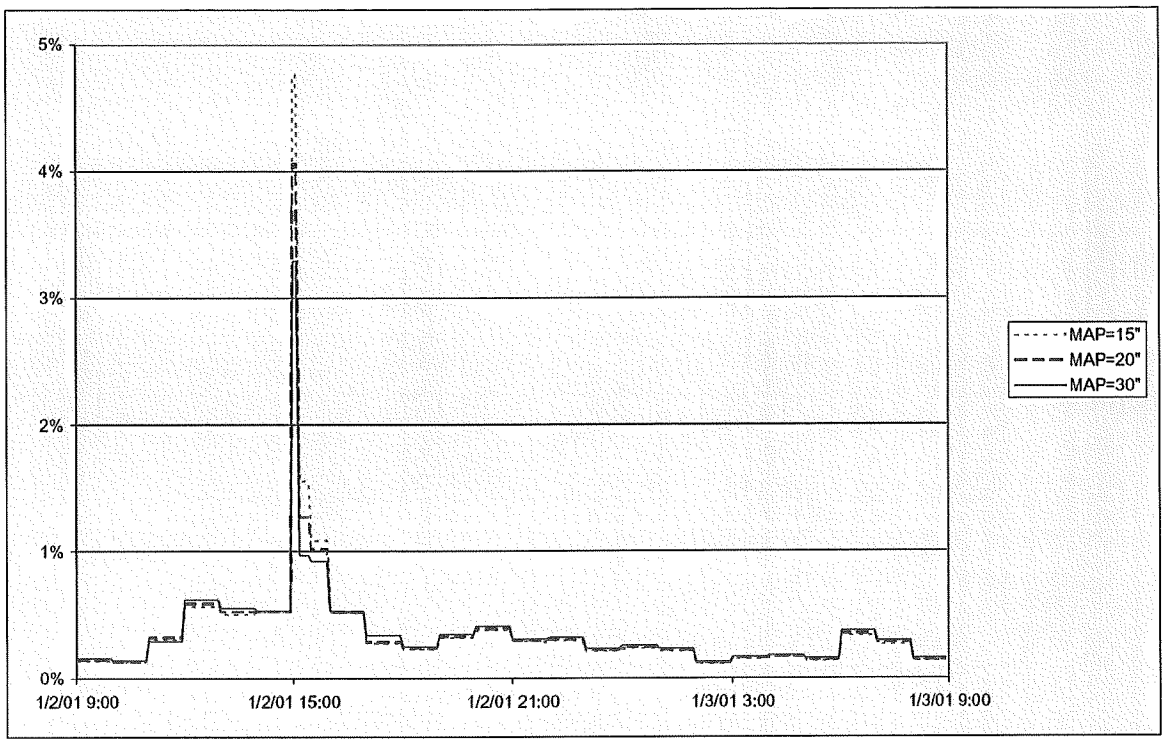

Figure 4. Statistically Balanced Rainfall Pattern for Interior Drainage Analysis (MAP = 15")

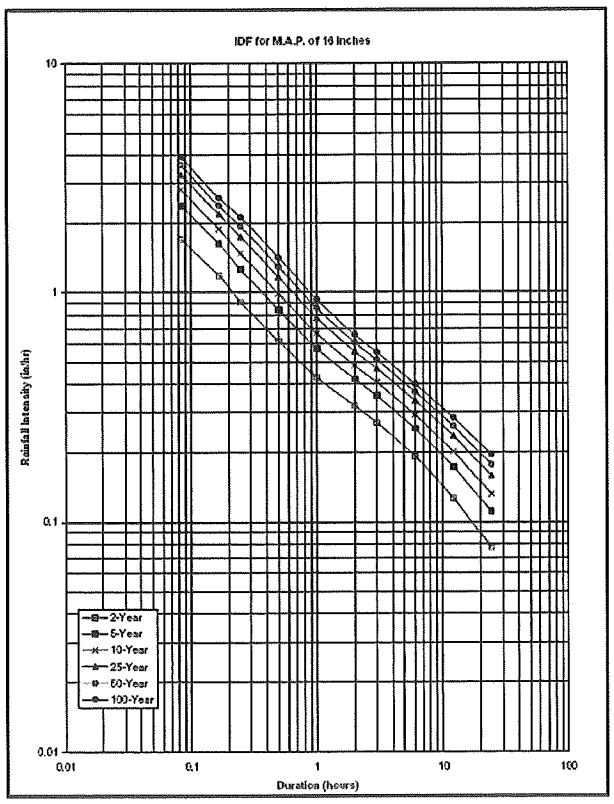

Figure 5. IDF Curve for MAP = 16"

Runoff from Interior Watershed. Using statistical rainfall data from the Santa Clara Valley Water District, the design storm pattern, and a calibrated AMC value from the Drainage Manual, interior runoff hydrographs for individual catchments are derived and combined to produce discharge estimates at the pump station inlet.

To evaluate residual flooding at the pump station and park within the area interior to the east bank Lower Penitencia Creek levee, a synthetic unit hydrograph procedure is used with aforementioned rainfall pattern to produce requisite runoff hydrographs through a process known as convolution. A unit hydrograph is defined as the basin runoff produced by one inch of rainfall excess applied uniformly over the basin over that "unit" of time. District procedures call for the use of Clark's two-parameter dimensionless unit hydrograph. The first parameter, t_c, is equal to the time of concentration (in hours) for a catchment. The second prameter, R, is a storage coefficient (in hours) which modifies the "peakedness" of the unit hydrograph.

Times of concentration for individual storm drain systems are calculated using the Rational Formula and the balanced storm pattern presented earlier, as represented by an intensity-duration-frequency function. The Rational Formula uses a runoff coefficient to convert rainfall intensity over a time of concentration into direct runoff:

$$Q = k\,C\,i\,A$$

where k is a unit conversion factor (1.008), C is the runoff coefficient, *i* is the rainfall intensity (inches per hour) for a given duration equivalent to the time of concentration at any design point, and A is the total tributary basin area at that design point. Runoff coefficients have been established for land use categories found within the interior area, and are based on NRCS Type "D" soil values from Table 3-1 of the Santa Clara County Drainage Manual (Appendix A). Table 2 summarizes the runoff coefficients assigned to each land use type.

R is related to t_c by the following ratio:

$$\frac{R}{t_c + R}$$

which generally ranges between 0.1 and 0.5 within urbanized areas and is set in this analysis to replicate peak runoff estimated by the Rational Formula.

Table 2. Runoff Coefficients and Percent Impervious

Description	Runoff Coefficient (C)	Area (acres)	%	Imperviousness	Weighted
Low Density Residential	0.45	0	0	40	0.0
Medium Density Residential	0.60	211	49	60	29.5
High Density Residential	0.75	104	24	80	19.4
Commercial	0.80	90	21	90	18.9
Industrial	0.75	0	0	85	0.0
Parks	0.35	24	6	20	1.1
Total		429	100		68.9

Rainfall intensity (i) is obtained using the Intensity-Duration-Frequency (IDF) curve presented above, which is consistent with the balanced rainfall pattern ultimately used to generate runoff hydrographs. The 100-year IDF curve can also be represented as a power function:

$$i = \frac{K}{t^n}$$

where i is the rainfall intensity in inches per hour;
t is the rainfall duration (time of concentration) in hours; and
K, n are power function coefficients; 0.93 and 0.58, respectively for durations less than an hour.

The time of concentration for each sub-basin assumes an initial roof-to-gutter time (where appropriate) of ten minutes, plus travel time to the most upstream storm drain inlet, plus the travel time within the storm drain system from the upstream catch point, based on an assumption of surcharged (full) pipe flow. Pipe and street capacities between storm drain system nodes are checked to ensure that the depth of street flow is less than one foot within each interior basin.

Travel time to the most upstream inlet is calculated using the using the Kerby-Hathaway formula (Hjelmfelt, 1986):

$$t_{co} = 0.01377\left[(Ln)^{0.47}\, S^{-0.235}\right]$$

where t_c is the time of concentration in hours, L is the flow travel distance in feet, n is the Manning's watershed roughness coefficient for overland flow (0.015 for pavement; 0.25 for sparsely covered open space; and 0.4 for well vegetated open space), and S is the average slope in ft/ft. Pipe capacities are calculated using Manning's formula:

$$Pipe\,Capacity = \frac{1.49}{n}\,\frac{\pi D^{8/3}}{(4)^{5/3}}\,S^{1/2}$$

where n is Manning's coefficient (0.013 for RCP; 0.024 for CMP), D is the storm drain diameter, and S is the hydraulic gradient between system nodes assuming full pipe flow. (During the one-percent event, storm drains are almost universally surcharged in this part of Milpitas.)

The difference between estimated discharge and pipe capacity at any node is assumed to be carried in the street from curb to curb. Street areas outside of each face of curb are assumed to be ineffective since it is quite common to plant trees or other vegetation on public right-of-way near the curb. Spreadsheets track the capacity for flow within the street at 0.5 foot above top of curb, where flood hazard mapping would change from Shaded Zone X as currently shown on the DFIRM to a Zone AO indicating shallow sheet flow. Street capacity is calculated using Manning's formula:

$$Street\ Capacity = \frac{1.49}{n} A R^{2/3} S^{1/2}$$

where S is defined as street slope (ft/ft) and the product of the remaining terms is called the conveyance, K. Using a weighted Manning's coefficient of 0.025 to include the effect of parked cars and debris, street conveyance is calculated for the typical rights-of-way in Table 3. Cross slopes are assumed to be two percent.

Table 3. Street Conveyance at AO Zone Threshold

Street Type	ROW (ft)	W (ft)	D (ft)	Area (ft^2)	Wetted Perimeter (ft)	Hydraulic Radius (ft)	Conveyance K
Minor/Local	56	10	18	29.52	37.0	0.80	1513
Collector	60	10	20	32.00	41.0	0.78	1617
Minor Industrial	60	6	24	36.48	49.0	0.74	1786
Major Industrial	80	6	34	44.88	69.0	0.65	2008
Secondary	90	10	35	45.50	71.0	0.64	2015
Major Arterial†	124	10	44	49.28	89.0	0.55	1980
Minor Frontage‡	40	10	30	21.00	30.5	0.69	976
Collector Frontage‡	44	10	34	22.44	34.5	0.65	1004
Industrial Frontage‡	42	6	36	23.04	36.5	0.63	1010

†16' median strip not included in street conveyance
‡Full section of street shown; for other street types half-section is shown

The Rational Formula is used to estimate travel time within the storm drain system and hence the total the time of concentration for a given catchment. That total time of concentration and the Clark Storage Coefficient produce a synthetic unit hydrograph using the SCS Curve Number (CN) Method for losses. The SCS CN is determined using Table E-1 and Table E-2 from the Drainage Manual (Appendix A). The calibrated Antecedent Moisture Condition is AMC II½ and curve numbers for type D soil are used. Pervious areas assume a CN of 74 (AMC II) for urban areas in fair condition to reflect an average condition of urban open spaces (including lawn areas) throughout the interior drainage area. The percentage of impervious cover for buildings, pavement and hardscape is calculated in Table 2 by weighting the imperviousness of each land use type based on aerial photographs of the area.

ANALYSES OF INTERIOR DRAINAGE FACILITY

A synthetic unit hydrograph generated for the interior basin tributary to Jurgens Pump Station using the techniques previously described is convolved with the balanced 24-hour, 100-year storm pattern to produce a runoff hydrograph for the interior basin. This hydrograph is routed through the Jurgens Pump Station and detention area as described below.

Interior Runoff Tributary to Pump Station. Runoff from the interior drainage area, including areas east of the railroad that are not protected by the Lower Penitencia Creek Levee, collects at the Jurgens Pump Station in Dixon Landing Park and water stored in the detention area is pumped to Lower Penitencia Creek at Station 28+10 on the east bank. Pertinent basin parameters are provided below. The estimation of peak runoff and time of concentration are provided in Appendix B. Hydrograph computations are provided in Appendix C.

<u>Jurgens Pump Station</u>
Basin Area = 429.34 acres (0.67 mi^2)
Net C = 0.66
Initial t_c = 10 minutes roof to gutter
Basin t_c = 30.8 minutes = 0.51 hour
Calibrate R / t +R = 0.47; R = 0.45
Open Space CN (AMC II) = 74 (Type D soil; fair condition from Table E-1, Appendix A)
Open Space CN (AMC II½ = 81 (Table E-2, Appendix A)
Percent Impervious Cover = 69 (Table 2)

Figure 6 shows the one-percent inflow hydrograph computed in Appendix C.

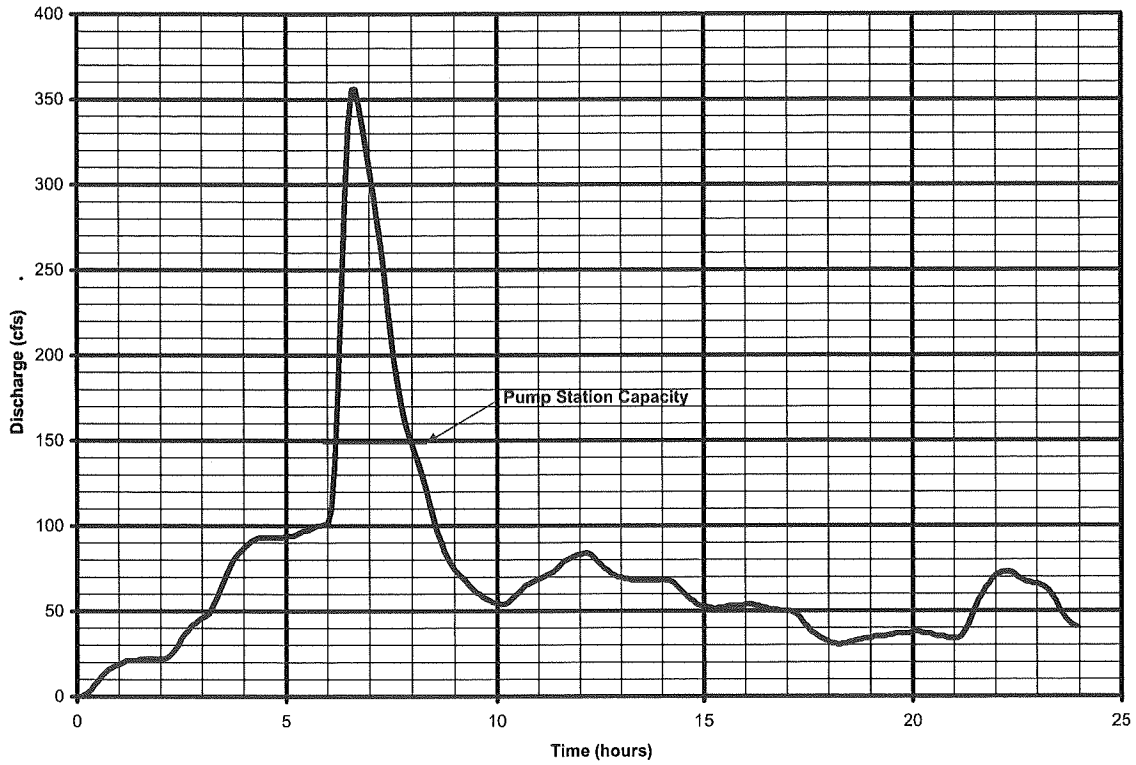

Figure 6. One-Percent Interior Runoff Hydrograph to Jurgens Pump Station

Jurgens Pump Station. The pump station is designed to operate in tandem with available storage in California Landing Park. Overflow begins at an approximate elevation of 8.0 feet NAVD. The station is equipped with four 60 hp Johnston 24PO axial flow pumps rated to discharge 16,000 gpm each at ten feet of head, each driven by a 150 horsepower diesel engine through a right angle gear drive; and a 25 hp 3,000 gpm jockey pump. The nominal pump station capacity is therefore 67,000 gpm or 150 cfs. Pump station capacity is checked against system hydraulics assuming a coincident 100-year stage in Lower Penitencia Creek:

One-percent BFE at Lower Penitencia Creek outfall	15.7 feet NAVD
Exit loss at 72″ outfall with 150 cfs	+ 0.4 foot
Friction loss in 700 LF of 72″ RCP outfall with 150 cfs	+ 0.9 foot
Entrance loss at 72″ outfall with 150 cfs	+ 0.1 foot
Energy grade at pump discharge box	17.1 feet NAVD
Elevation at which overflow ponding begins	- 8.0 feet NAVD
Static lift	9.1 feet
Exit loss at 30″ pump discharge with 16,000 gpm	+ 0.8 foot
Friction loss through 20 LF of 30″ pump column (16,000 gpm)	+ 0.1 foot
Head loss at discharge elbow (16,000 gpm)	+ 0.2 foot
Total Dynamic Head	10.2 feet

The calculation presented above confirms that under design conditions, with a coincident one-percent stage in Lower Penitencia Creek and the onset of ponding, the axial flow pumps should operate at their nameplate rating of 16,000 gpm.

Since inflow to the Jurgens Pump Station exceeds the total station capacity, excess storm water is stored in the adjacent park. A storage-elevation curve calculated for the adjacent park based on the 2006 LiDAR topography (Figure 7) is used to route the inflow hydrograph (see HEC-1 and Spreadsheet C.2). Water can be stored to an approximate elevation of 12.7 feet NAVD before being released across Dixon Landing Road north into Fremont. The maximum predicted stage in the park is 12.1 feet NAVD.

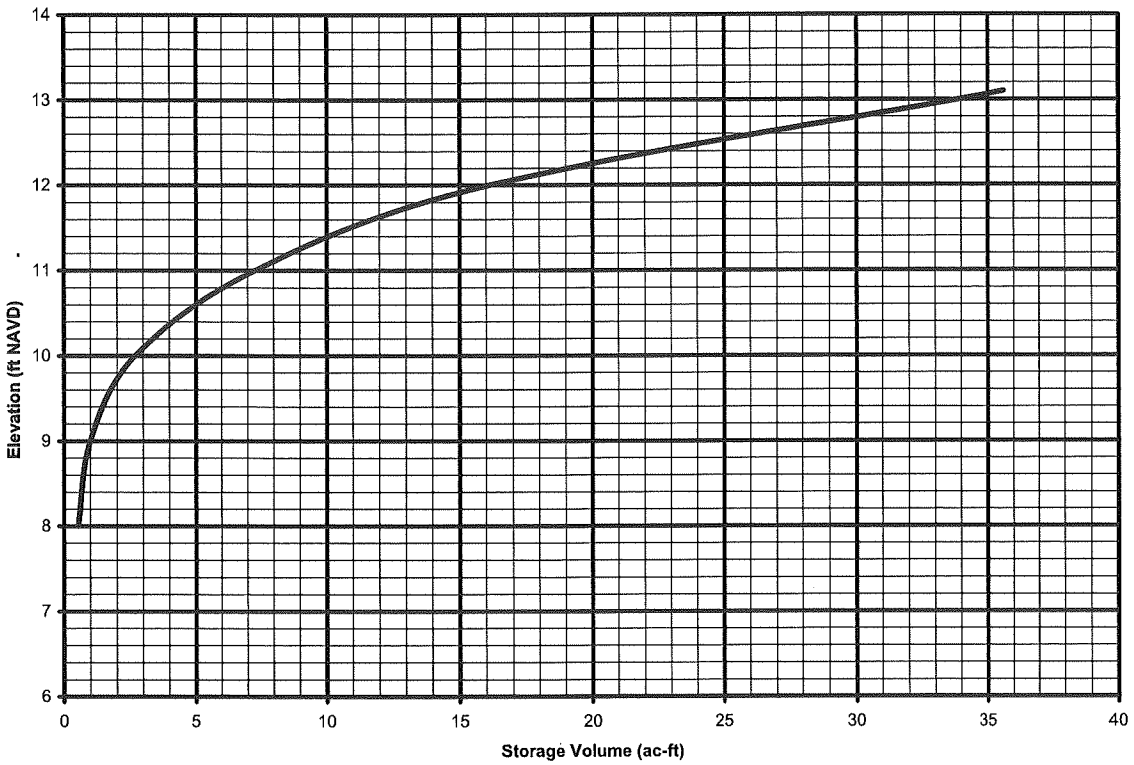

Figure 7. Storage-Elevation Relationship for California Landing Park

RESIDUAL FLOODPLAIN MAPPING

An area of residual ponding (Zone AH) at elevation 12 feet NAVD should be mapped as shown in Figure 2. All other areas protected by the East Lower Penitencia Creek Levee should be mapped as Shaded Zone X. These findings are generally consistent with the "City of Milpitas Storm Drain Master Plan" (Schaaf & Wheeler 2001), which indicates an area of residual interior ponding at elevation 12.5 feet NAVD.

Appendix A

Figures and Tables
Excerpted from Santa Clara County Drainage Manual

Figure A-2: Mean Annual Precipitation Map

TDS Precipitation Depth Table B-2

Runoff Coefficients (Table 3-1)

SCS Curve Numbers (Tables E-1 and E-2)

Figure A-2
Mean Annual Precipitation Map
Santa Clara County

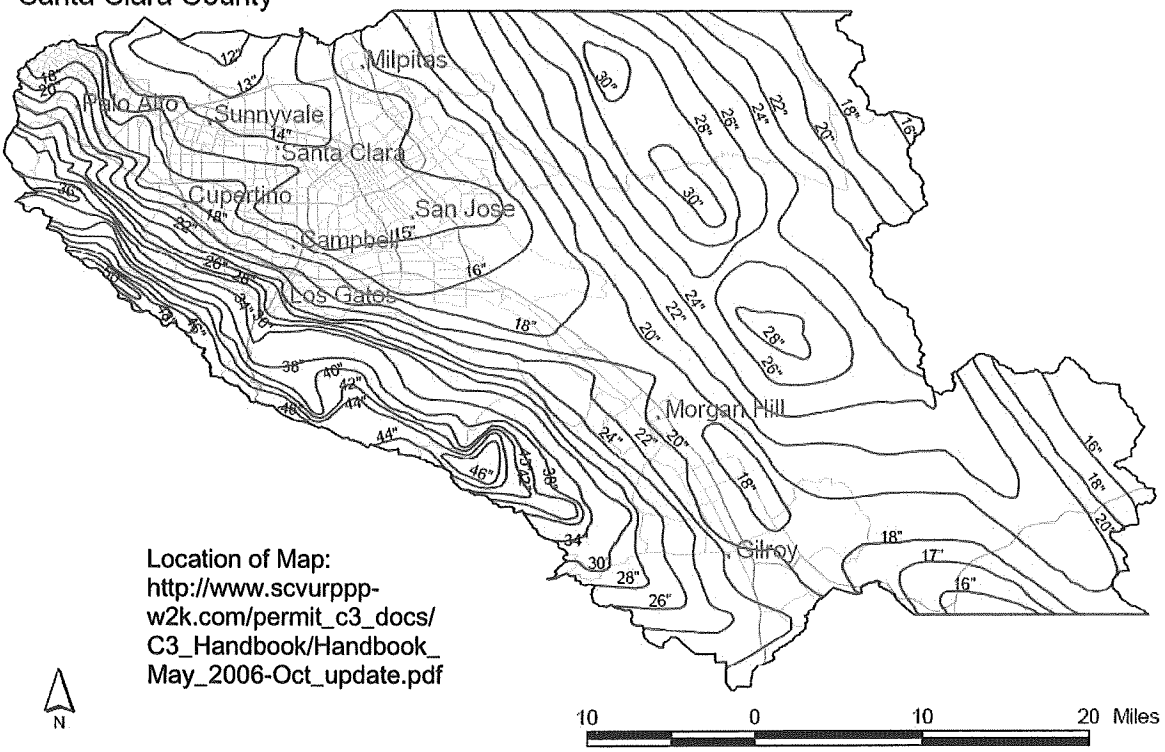

SOURCE: Santa Clara Valley Water District, Mean Annual Precipitation Map, San Francisco & Monterey Bay Region, 1998

Figure A-2: Mean Annual Precipitation, Santa Clara County

Table B-2: Parameters $A_{T,D}$ and $B_{T,D}$ for TDS Equation

Return Period/Duration	$A_{T,D}$	$B_{T,D}$
25-YR RETURN PERIOD		
5-min	0.230641	0.002691
10-min	0.287566	0.004930
15-min	0.348021	0.005594
30-min	0.443761	0.008719
1-hr	0.508791	0.016680
2-hr	0.612629	0.031025
3-hr	0.689252	0.044264
6-hr	0.693566	0.083195
12-hr	0.725892	0.132326
24-hr	0.675008	0.195496
48-hr	0.989588	0.264703
72-hr	0.967854	0.316424
50-YR RETURN PERIOD		
5-min	0.249324	0.003241
10-min	0.300971	0.006161
15-min	0.384016	0.006315
30-min	0.496301	0.009417
1-hr	0.568345	0.017953
2-hr	0.672662	0.033694
3-hr	0.754661	0.048157
6-hr	0.740666	0.092105
12-hr	0.779967	0.147303
24-hr	0.747121	0.219673
48-hr	1.108358	0.295510
72-hr	1.075643	0.353143
100-YR RETURN PERIOD		
5-min	0.269993	0.003580
10-min	0.315263	0.007312
15-min	0.421360	0.006957
30-min	0.553934	0.009857
1-hr	0.626608	0.019201
2-hr	0.732944	0.036193
3-hr	0.816471	0.051981
6-hr	0.776677	0.101053
12-hr	0.821859	0.162184
24-hr	0.814046	0.243391
48-hr	1.210895	0.325943
72-hr	1.175000	0.389038

In Table 3-1 Soil Types B, C and D are based on the SCS classification of HSG. This designation is a standard designation used by the SCS and has been defined for Santa Clara County in existing SCS publications. D-type soils are less permeable than are C-type soils, which are, in turn, less permeable than B-type soils.

Table 3-1: Runoff Coefficients for Rational Formula

Land Use	C for Soil Type		
	B	C	D
Low Density Residential	0.30	0.40	0.45
Medium Density Residential	0.50	0.55	0.60
High Density Residential	0.70	0.70	0.75
Commercial	0.80	0.80	0.80
Industrial	0.70	0.75	0.75
Parks	0.20	0.30	0.35
Agricultural	0.15	0.35	0.40
Urban Open Space	0.10	0.35	0.45
Shrub Land	0.10	0.20	0.30
Paved / Impervious Surface	0.85	0.85	0.85

The Rational Method implies that this ratio is fixed for a given drainage basin. Studies have shown, however, that the coefficient may vary with respect to prior wetting and seasonal conditions (antecedent moisture). It has also been observed that as rainfall intensity increases, soil permeability decreases. One may sense that runoff coefficients should increase with rainfall intensity.

Applying such non-linearities over relatively small urbanized drainage basins does not necessarily improve hydrologic precision enough to offset the more difficult computations, so using a constant runoff coefficient is standard in Santa Clara County. For watersheds with significant variation in antecedent moisture conditions, soil types, or other complexities, however; the hydrograph method described in Chapter 4 should be employed regardless of basin size.

Table E-1: Curve Numbers for AMC II

Land Use Type	Hydrologic Condition	Hydrologic Soil Group A	B	C	D
Open Water (100% Impervious)	good				
	fair				
	poor				
Low Density Residential (25% Impervious)	good	35	48	66	70
	fair	44	58	71	74
	poor	64	68	78	79
High Density Residential (50% Impervious)	good	35	48	65	70
	fair	44	58	71	74
	poor	64	68	78	79
Commercial/Industrial (80% Impervious)	good	35	48	65	70
	fair	44	58	71	74
	poor	64	68	78	79
Bare Rock/Sand/Clay (Imperviousness Varies)					
Quarries/Gravel Pits (0 % Impervious)	good	0	0	0	0
	fair	0	0	0	0
	poor	0	0	0	0
Deciduous Forest (0% Impervious)	good	27	30	41	48
	fair	35	48	57	63
	poor	48	66	74	79
Evergreen Forest (0% Impervious)	good	37	43	62	70
	fair	45	57	69	80
	poor	58	71	85	90
Mixed Forest	good	32	36	51	59
	fair	40	52	63	72
	poor	53	68	80	85
Shrub Land (0% Impervious)	good	27	43	60	68
	fair	35	51	65	72
	poor	48	62	72	78
Orchards (1% Impervious)	good	39	52	66	71
	fair	43	65	76	82
	poor	57	73	82	86
Vineyards (1% Impervious)	good	64	70	77	80
	fair	67	75	82	85
	poor	71	80	87	90
Grassland (0% Impervious)	good	38	50	69	76
	fair	48	60	74	80
	poor	58	70	80	84
Pasture/Hay (0% Impervious)	good	34	50	69	76
	fair	44	60	74	80
	poor	64	70	80	84
Row Crops (1% Impervious)	good	64	70	77	80
	fair	67	75	82	85
	poor	71	80	87	90
Small Grains (0% Impervious)	good	48	58	70	74
	fair	49	59	71	75
	poor	50	60	71	75
Fallow (1% Impervious)	good	64	68	78	79
	fair	70	77	84	86
	poor	77	86	91	94
Urban Recreational (10% Impervious)	good	34	48	66	70
	fair	44	58	71	74
	poor	64	64	78	79

Table E-2: Conversion of AMC II Curve Numbers to Other AMC Values

AMC II	AMC I	AMC III	AMC II-1/4	AMC II-1/2
100	100	100	100	100
99	97	100	99.5	100
98	94	99	98.5	99
97	91	99	97.5	98
96	89	99	97	98
95	87	98	96	97
94	85	98	95	96
93	83	98	94.5	96
92	81	97	93.5	95
91	80	97	92.5	94
90	78	96	91.5	93
89	76	96	91	93
88	75	95	90	92
87	73	95	89	91
86	72	94	88	90
85	70	94	87.5	90
84	68	93	86.5	89
83	67	93	85.5	88
82	66	92	84.5	87
81	64	92	84	87
80	63	91	83	86
79	62	91	82	85
78	60	90	81	84
77	59	89	80	83
76	58	89	79.5	83
75	57	88	78.5	82
74	55	88	77.5	81
73	54	87	76.5	80
72	53	86	75.5	79
71	52	86	75	79
70	51	85	74	78
69	50	84	73	77
68	48	84	72	76
67	47	83	71	75
66	46	82	70	74
65	45	82	69.5	74
64	44	81	68.5	73
63	43	80	67.5	72

AMC II	AMC I	AMC III	AMC II-1/4	AMC II-1/2
61	41	78	65.5	70
60	40	78	64.5	69
59	39	77	63.5	68
58	38	76	62.5	67
57	37	75	61.5	66
56	36	75	61	66
55	35	74	60	65
54	34	73	59	64
53	33	72	58	63
52	32	71	57	62
51	31	70	56	61
50	31	70	55	60
49	30	69	54	59
48	29	68	53	58
47	28	67	52	57
46	27	66	51	56
45	26	65	50	55
44	25	64	49	54
43	25	63	48	53
42	24	62	47	52
41	23	61	46	51
40	22	60	45	50
39	21	59	44	49
38	21	58	43	48
37	20	57	42	47
36	19	56	41	46
35	18	55	40	45
34	18	54	39	44
33	17	53	38	43
32	16	52	37	42
31	16	51	36	41
30	15	50	35	40
25	12	43	29.5	34
20	9	37	24.5	29
15	6	30	19	23
10	4	22	13	16
5	2	13	7	9
0	0	0	0	0

Appendix B

Runoff Calculations
Storm Drain System Tributary to Jurgens Pump Station

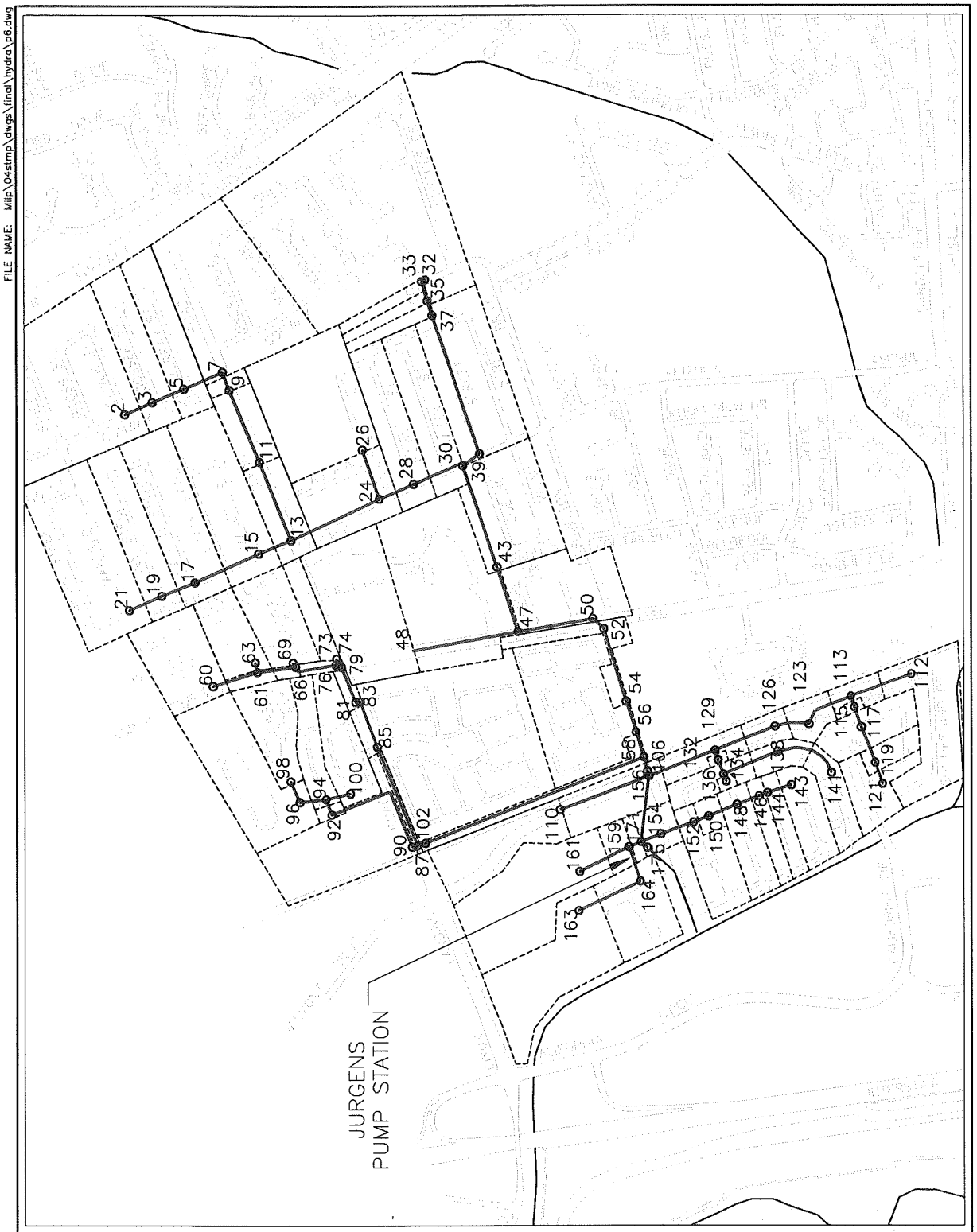

Collection System P6

SCALE: 1" = 300

Runoff Calculations for Drainage System Tributary to Jurgens Pump Station

Intensity

I = K/t^n
I = Intensity
k = 1.008
MAP = 16
O = kCIA
10-yr K = 0.74
100-yr K = 0.93
n = 0.58

Input
Calculated
Calculated (Unique)
0 USP zero upstream pipes (entering upstream manhole)
USP # upstream pipes (entering upstream manhole)

Velocity (Mannings)

Sf = ((Q*n)/(1.49*A*R^(2/3)))^2
V = Q/A
V = Velocity, ft/s
R = hydraulic radius, ft (A/P)
A = cross-sectional flow area, sf (pipe area since assuming flowing full)
P = Wetted perimeter, ft (pipe perimeter since assuming flowing full)
Sf = Friction slope,

Street Type	K (Curb)	K (ROW)
-	-	-
Minor	186	1513
Collector	315	1617
Minor Industri	299	1786
Major Industri	292	2008
Secondary Art	292	2015
Major Arterial	292	1980
Minor Frontag	146	976
Collector Fron	146	1004
Industrial Fron	146	1010

Step #	8	7	7	9 (b)	10 (b)	11	12 (a)	13 (a)	14 (a)	14 (a)	15 (a)	15 (a)	16	17	25	19					22	27	28
Pipe ID #	Top of Reach Condition	U/S Manhole	D/S Manhole	Manhole up - down	Land Use Coeff, C	Area (acres)	C x A (acres)	Cum. C x A (acres)	Pipe Length (ft)	n	Diameter (in)	U/S Invert Elev. (ft)	D/S Invert Elev. (ft)	Pipe Slope (ft/ft)	A (full) (sf)	P (full) (ft)	R (full) (ft)	Q (full) (cfs)	U/S Ground Elev. (ft)	D/S Ground Elev. (ft)	Street Slope (ft/ft)	Street Type	100-Year Analysis Shed Tc (min)	100-Year Analysis Shed I (in/hr)	100-Year Analysis System Tc (min)	100-Year Analysis System I (in/hr)	100-Year Analysis Flow Rate (cfs)	100-Year Analysis Velocity (ft/s)	100-Year Analysis Pipe Capacity (cfs)	100-Year Analysis Street Flow (cfs)	ROW K	100-Year Analysis Max ROW Q (cfs)	100-Year Analysis Contained in ROW? (Y or N)
1	0 USP	2	3	2 - 3	0.60	22.50	13.50	13.50	200	0.013	18	80.32	79.11	0.00605	1.767	4.71	0.38	8.19	84.40	83.50	0.0045	Collector	18.19	1.86	18.19	1.86	25.29	14.31	7.07	18.22	1617	108.47	YES
4		3	5	3 - 5	0.60	6.05	3.63	17.13	235	0.013	21	79.11	77.68	0.00609	2.405	5.50	0.44	12.39	83.50	82.50	0.0043	Collector	15.57	2.03	18.29	1.85	31.99	13.30	10.36	21.63	1617	105.48	YES
6		5	7	5 - 7	0.60	6.38	3.83	20.96	275	0.013	21	77.68	75.44	0.00815	2.405	5.50	0.44	14.34	82.50	80.10	0.0087	Collector	15.77	2.02	18.39	1.85	39.01	16.22	14.84	24.17	1617	151.06	YES
8		7	9	7 - 9	0.60	17.32	10.39	31.35	125	0.013	21	74.24	70.79	0.02760	2.405	5.50	0.44	26.39	80.10	77.00	0.0248	Major Industrial	15.26	2.06	18.47	1.84	58.20	24.20	25.02	33.18	2008	316.22	YES
10		9	11	9 - 11	0.60	0.68	0.41	31.76	530	0.013	24	62.15	56.23	0.01117	3.142	6.28	0.50	23.97	77.00	62.50	0.0274	Major Industrial	11.00	2.49	18.53	1.84	58.87	18.74	37.52	21.35	2008	332.13	YES
12		11	13	11 - 13	0.60	3.46	2.07	33.84	590	0.013	24	56.23	42.73	0.02288	3.142	6.28	0.50	34.31	62.50	49.80	0.0215	Major Industrial	10.00	2.63	18.58	1.84	62.60	19.93	33.28	29.32	2008	294.60	YES
20	0 USP	21	19	21 - 19	0.60	13.62	8.17	8.17	240	0.013	21	44.68	43.59	0.00454	2.405	5.50	0.44	10.71	50.20	49.40	0.0033	Minor	17.94	1.87	17.94	1.87	15.43	6.41	9.17	6.26	1513	87.35	YES
18		19	17	19 - 17	0.60	6.60	3.96	12.13	250	0.013	24	43.59	42.63	0.00384	3.142	6.28	0.50	14.06	49.40	48.80	0.0024	Minor	15.99	2.00	18.07	1.87	22.82	7.26	11.11	11.70	1513	74.12	YES
16		17	15	17 - 15	0.60	9.50	5.70	17.83	460	0.013	27	42.63	39.99	0.00550	3.976	7.07	0.56	23.03	48.80	48.50	0.0010	Minor	16.40	1.97	18.18	1.86	33.42	8.40	9.82	23.60	1513	47.85	YES
14		15	13	15 - 13	0.60	9.88	5.93	23.76	220	0.013	30	39.99	39.30	0.00314	4.909	7.85	0.63	23.03	48.50	49.80	0.0010	Minor	16.34	1.98	18.28	1.85	44.39	9.04	13.01	31.38	1513	47.85	YES
22	2 USP	13	24	13 - 24	0.60	4.22	2.53	60.13	670	0.013	54	39.30	37.01	0.00342	15.904	14.14	1.13	115.28	49.80	47.00	0.0042	Minor	13.99	2.16	19.08	1.81	109.56	6.89	127.47	0.00	1513	97.81	YES
25	0 USP	26	24	26 - 24	0.60	13.53	8.12	8.12	395	0.013	18	47.93	39.63	0.02101	1.767	4.71	0.38	15.27	54.50	47.00	0.0190	Minor	14.79	2.10	14.79	2.10	17.14	9.70	14.51	2.63	1513	208.48	YES
27	2 USP	24	28	24 - 28	0.60	7.22	4.33	72.57	260	0.013	54	37.01	35.68	0.00512	15.904	14.14	1.13	141.03	47.00	46.80	0.0010	Minor	17.19	1.92	20.79	1.72	126.13	7.93	62.35	63.78	1513	47.85	NO
29		28	30	28 - 30	0.60	6.55	3.93	76.50	390	0.013	54	35.68	33.48	0.00564	15.904	14.14	1.13	148.09	46.80	45.00	0.0046	Minor	17.07	1.93	20.79	1.72	132.59	8.34	133.96	0.00	1513	102.79	YES
31	0 USP	32	33	32 - 33	0.60	38.52	23.11	23.11	30	0.013	24	57.10	56.73	0.01233	3.142	6.28	0.50	25.19	68.00	68.70	0.0010	Minor	20.97	1.71	20.97	1.71	39.86	12.69	7.17	32.69	1513	47.85	YES
34		33	35	33 - 35	0.60	1.15	0.69	23.80	145	0.013	24	56.73	52.64	0.02821	3.142	6.28	0.50	38.10	68.70	67.00	0.0117	Minor	11.00	2.49	21.06	1.71	40.95	13.03	24.56	16.38	1513	163.82	YES
36		35	37	35 - 37	0.60	1.11	0.67	24.46	97	0.013	48	52.64	52.58	0.00062	12.566	12.57	1.00	35.82	67.00	64.30	0.0278	Minor	11.00	2.49	21.15	1.70	41.99	3.34	240.30	0.00	1513	252.43	YES
38		37	39	37 - 39	0.60	1.24	0.74	25.21	1020	0.013	27	52.58	37.13	0.01515	3.976	7.07	0.56	38.22	64.30	44.60	0.0193	Minor	11.00	2.49	21.47	1.69	42.89	10.79	43.16	0.00	1513	210.27	YES
40		39	30	39 - 30	0.60	11.96	7.18	32.39	120	0.013	30	34.62	33.48	0.00950	4.909	7.85	0.63	40.09	44.60	45.00	0.0010	Minor	19.53	1.78	21.54	1.68	55.01	11.21	13.01	42.00	1513	47.85	YES
41	2 USP	30	43	30 - 43	0.60	6.50	3.90	112.79	725	0.013	48	33.48	26.42	0.00974	12.566	12.57	1.00	142.13	45.00	35.00	0.0138	-	17.63	1.89	21.71	1.68	190.64	15.17	169.15	21.49	-	-	-
44		43	47	43 - 47	0.60	9.80	5.88	118.66	435	0.013	48	26.42	21.80	0.01062	12.566	12.57	1.00	148.43	35.00	29.80	0.0120	-	15.57	2.03	21.75	1.68	200.37	15.95	157.47	42.90	-	-	-
46	0 USP	48	47	48 - 47	0.80	12.07	9.66	9.66	535	0.013	27	26.49	21.80	0.00877	3.976	7.07	0.56	29.08	32.50	29.80	0.0050	Major Arterial	17.85	1.88	17.85	1.88	18.29	4.60	22.06	0.00	1980	140.66	YES
49	2 USP	47	50	47 - 50	0.80	17.17	13.73	142.06	490	0.013	54	21.80	17.61	0.00855	15.904	14.14	1.13	182.33	29.80	26.00	0.0078	-	18.43	1.84	22.21	1.66	237.01	14.90	173.64	63.37	-	-	-
51		50	52	50 - 52	0.75	8.46	6.35	148.40	125	0.013	60	17.61	16.73	0.00704	19.635	15.71	1.25	218.11	26.00	24.80	0.0096	-	17.04	1.93	22.24	1.65	247.41	12.60	255.87	0.00	-	-	-
53		52	54	52 - 54	0.80	2.14	1.71	150.12	530	0.013	48	16.73	13.73	0.00566	12.566	12.57	1.00	108.36	24.80	18.00	0.0128	-	16.91	1.94	22.27	1.65	250.06	19.90	163.14	86.91	-	-	-

Step #				9 (b)	10 (b)	11	12 (a)	29	29	29	29	14 (a)	14 (a)		15 (a)	15 (a)							25	19	9
Channel ID #	Top of Reach Condition	U/S ID Location	D/S ID Location	Manhole up - down	Land Use Coeff, C	Area (acres)	C x A (acres)	Cum. C x A (acres)	Channel Length (ft)	n	Bottom Width (ft)	Left Slope (H:V)	Right Slope (H:V)	U/S Invert Elev. (ft)	D/S Invert Elev. (ft)	Channel Slope (ft/ft)	D (full) (ft)	A (full) (sf)	P (full) (ft)	R (full) (ft)	Q (full) (cfs)	U/S Ground Elev. (ft)	D/S Ground Elev. (ft)	100-Year Analysis Shed Tc (min)	100-Year Analysis Shed I (in/hr)	100-Year Analysis System Tc (min)	100-Year Analysis System I (in/hr)	100-Year Analysis Flow Rate (cfs)	100-Year Analysis Velocity (ft/s)	100-Year Analysis Contained in ROW? (Y or N)
55		54	56	54 - 56	0.75	0.84	0.63	150.75	160	0.02	11	0	0	13.73	12.93	0.00500	3.67000	40.37000	18.340	2.20	359.87	18.00	16.00	15.04	2.07	22.28	1.65	251.01	6.22	YES
57		56	58	56 - 58	0.75	12.63	9.47	160.22	205	0.02	11	0	0	12.93	11.90	0.00502	3.42500	37.67000	17.850	2.11	327.36	16.00	15.68	14.24	2.14	22.33	1.65	266.48	7.07	YES

Step #	8	7	7	9 (b)	10 (b)	11	12 (a)	13 (a)	14 (a)	14 (a)	15 (a)	15 (a)	16	17	25	19					22	27	28
Pipe ID #	Top of Reach Condition	U/S Manhole	D/S Manhole	Manhole up - down	Land Use Coeff, C	Area (acres)	C x A (acres)	Cum. C x A (acres)	Pipe Length (ft)	n	Diameter (in)	U/S Invert Elev. (ft)	D/S Invert Elev. (ft)	Pipe Slope (ft/ft)	A (full) (sf)	P (full) (ft)	R (full) (ft)	Q (full) (cfs)	U/S Ground Elev. (ft)	D/S Ground Elev. (ft)	Street Slope (ft/ft)	Street Type	100-Year Analysis Shed Tc (min)	100-Year Analysis Shed I (in/hr)	100-Year Analysis System Tc (min)	100-Year Analysis System I (in/hr)	100-Year Analysis Flow Rate (cfs)	100-Year Analysis Velocity (ft/s)	100-Year Analysis Pipe Capacity (cfs)	100-Year Analysis Street Flow (cfs)	ROW K	100-Year Analysis Max ROW Q (cfs)	100-Year Analysis Contained in Curb? (Y or N)
59	0 USP	60	61	60 - 61	0.60	6.70	4.02	4.02	310	0.013	21	31.86	31.69	0.00055	2.405	5.50	0.44	3.72	37.80	36.20	0.0052	Major Arterial	18.58	1.96	18.58	1.96	7.94	3.30	11.41	0.00	1980	142.25	YES
62	0 USP	63	61	63 - 61	0.75	4.05	3.04	3.04	65	0.013	18	32.08	31.84	0.00369	1.767	4.71	0.38	6.40	36.20	36.10	0.0015	Minor	13.82	2.18	13.82	2.18	6.67	3.77	4.13	2.54	1513	59.34	YES
64	2 USP	61	66	61 - 66	0.80	0.70	0.56	7.61	255	0.013	21	31.69	30.99	0.00275	2.405	5.50	0.44	8.32	36.10	35.20	0.0035	Major Arterial	12.20	2.34	18.14	1.86	14.28	5.94	9.44	4.84	1980	117.63	YES
67	0 USP	69	66	69 - 66	0.75	5.32	3.99	3.99	50	0.013	18	31.31	31.11	0.00400	1.767	4.71	0.38	6.66	35.30	35.20	0.0020	Minor	14.36	2.13	14.36	2.13	8.57	4.85	4.71	3.86	1513	67.66	YES
70	2 USP	66	73	66 - 73	0.80	0.33	0.27	11.87	330	0.013	21	30.99	29.35	0.00497	2.405	5.50	0.44	11.20	35.20	34.20	0.0030	Major Arterial	12.63	2.30	18.86	1.82	21.77	9.05	8.75	13.02	1980	109.00	YES
72		73	74	73 - 74	0.80	0.00	0.00	11.87	20	0.013	21	29.35	29.23	0.00600	2.405	5.50	0.44	12.31	34.20	34.00	0.0100	Major Arterial	15.20	2.06	18.92	1.82	21.72	9.03	15.89	5.84	1980	198.00	YES
75	0 USP	76	74	76 - 74	0.80	2.19	1.75	1.75	70	0.013	18	32.08	30.86	0.01743	1.767	4.71	0.38	13.90	34.70	34.00	0.0100	Major Arterial	14.78	2.10	14.78	2.10	3.70	2.09	10.53	0.00	1980	198.00	YES
77	2 USP	74	79	74 - 79	0.80	0.57	0.45	14.07	15	0.013	21	29.23	28.71	0.03467	2.405	5.50	0.44	29.58	34.00	34.00	0.0010	Major Industrial	10.00	2.63	18.96	1.81	25.73	10.70	5.02	20.71	2008	63.50	YES
80		79	81	79 - 81	0.80	0.00	0.00	14.07	285	0.013	21	26.55	23.13	0.01200	2.405	5.50	0.44	17.40	34.00	29.70	0.0151	Major Industrial	10.00	2.63	19.01	1.81	25.69	10.68	19.52	6.17	2008	246.65	YES
82		81	83	81 - 83	0.80	0.63	0.51	14.58	45	0.013	21	22.93	22.37	0.01244	2.405	5.50	0.44	17.72	29.70	29.60	0.0022	Major Industrial	12.09	2.36	19.06	1.81	26.57	11.05	7.49	19.09	2008	94.66	YES
84		83	85	83 - 85	0.80	0.00	0.00	14.58	430	0.013	21	22.37	17.40	0.01156	2.405	5.50	0.44	17.08	29.60	25.60	0.0093	Major Industrial	10.00	2.63	19.10	1.81	26.54	11.03	15.32	11.22	2008	193.67	YES
86		85	87	85 - 87	0.80	26.35	21.08	35.66	575	0.013	33	17.15	12.91	0.00737	5.940	8.64	0.69	45.54	25.60	21.50	0.0071	Major Industrial	18.67	1.83	19.14	1.80	64.84	10.92	44.78	20.07	2008	169.56	YES
97	0 USP	98	96	98 - 96	0.80	4.75	3.80	3.80	191	0.013	18	18.88	17.37	0.00791	1.767	4.71	0.38	9.37	24.00	21.30	0.0141	Minor	14.75	2.10	14.75	2.10	8.04	4.55	12.52	0.00	1513	179.89	YES
95		96	94	96 - 94	0.80	10.50	8.40	12.20	175	0.013	21	17.12	15.72	0.00800	2.405	5.50	0.44	14.21	21.30	22.70	0.0010	Minor	19.25	1.80	19.25	1.80	22.11	9.19	5.02	17.08	1513	47.85	YES
99	0 USP	100	94	100 - 94	0.80	5.09	4.07	4.07	180	0.013	27	15.62	15.27	0.00194	3.976	7.07	0.56	13.69	20.60	22.70	0.0010	Minor	16.99	1.93	16.99	1.93	7.94	2.00	9.82	0.00	1513	47.85	YES
93	2 USP	94	92	94 - 92	0.80	3.36	2.69	18.96	95	0.013	30	15.02	14.73	0.00305	4.909	7.85	0.63	22.72	22.70	21.90	0.0084	Minor	15.02	2.08	19.57	1.78	34.04	6.94	37.74	0.00	1513	138.84	YES
91		92	90	92 - 90	0.80	0.40	0.32	19.28	790	0.013	33	14.73	12.75	0.00251	5.940	8.64	0.69	26.55	21.90	21.50	0.0010	Minor	11.26	2.45	19.62	1.78	34.56	5.82	16.77	17.80	1513	47.85	YES
88		90	87	90 - 87	0.75	10.69	8.01	27.30	45	0.013	54	12.75	12.69	0.00133	15.904	14.14	1.13	72.00	21.50	21.50	0.0010	Major Industrial	14.70	2.10	19.68	1.78	48.84	3.07	62.35	0.00	2008	63.50	YES
101	2 USP	87	102	87 - 102	0.80	0.62	0.50	63.45	30	0.013	54	12.69	12.64	0.00167	15.904	14.14	1.13	80.50	21.50	17.90	0.1200	Major Industrial	19.55	1.78	20.02	1.76	112.43	7.07	683.05	0.00	2008	695.59	YES

Step #				9 (b)	10 (b)	11	12 (a)	29	29	29	29	14 (a)	14 (a)		15 (a)	15 (a)							25	19	9
Channel ID #	Top of Reach Condition	U/S ID Location	D/S ID Location	Manhole up - down	Land Use Coeff, C	Area (acres)	C x A (acres)	Cum. C x A (acres)	Channel Length (ft)	n	Bottom Width (ft)	Left Slope (H:V)	Right Slope (H:V)	U/S Invert Elev. (ft)	D/S Invert Elev. (ft)	Channel Slope (ft/ft)	D (full) (ft)	A (full) (sf)	P (full) (ft)	R (full) (ft)	Q (full) (cfs)	U/S Ground Elev. (ft)	D/S Ground Elev. (ft)	100-Year Analysis Shed Tc (min)	100-Year Analysis Shed I (in/hr)	100-Year Analysis System Tc (min)	100-Year Analysis System I (in/hr)	100-Year Analysis Flow Rate (cfs)	100-Year Analysis Velocity (ft/s)	100-Year Analysis Contained in ROW? (Y or N)
103		102	58	102 - 58	0.80	2.98	2.38	65.84	1655	0.02	10	0	0	12.64	11.90	0.00045	4.52000	45.20000	19.040	2.37	126.71	17.90	15.68	10.00	2.63	20.06	1.76	116.51	2.58	YES

Step #	8	7	7	9 (b)	10 (b)	11	12 (a)	13 (a)	14 (a)	14 (a)	15 (a)	15 (a)	16	17	25	19					22	27	28
Pipe ID #	Top of Reach Condition	U/S Manhole	D/S Manhole	Manhole up - down	Land Use Coeff, C	Area (acres)	C x A (acres)	Cum. C x A (acres)	Pipe Length (ft)	n	Diameter (in)	U/S Invert Elev. (ft)	D/S Invert Elev. (ft)	Pipe Slope (ft/ft)	A (full) (sf)	P (full) (ft)	R (full) (ft)	Q (full) (cfs)	U/S Ground Elev. (ft)	D/S Ground Elev. (ft)	Street Slope (ft/ft)	Street Type	100-Year Analysis Shed Tc (min)	100-Year Analysis Shed I (in/hr)	100-Year Analysis System Tc (min)	100-Year Analysis System I (in/hr)	100-Year Analysis Flow Rate (cfs)	100-Year Analysis Velocity (ft/s)	100-Year Analysis Pipe Capacity (cfs)	100-Year Analysis Street Flow (cfs)	ROW K	100-Year Analysis Max ROW Q (cfs)	100-Year Analysis Contained in Curb? (Y or N)
105	2 USP	58	106	58 - 106	0.75	0.00	0.00	226.06	135	0.013	60.7	11.90	10.78	0.00830	20.096	15.89	1.26	245.33	15.68	16.00	0.0010	-	11.20	2.46	30.76	1.37	312.19	15.54	85.18	227.02	-	-	-
107		106	156	106 - 156	0.60	0.00	0.00	226.06	15	0.013	72	10.78	5.03	0.38333	28.274	18.85	1.50	2629.16	16.00	16.00	0.0010	-	12.27	2.33	30.78	1.37	312.09	11.04	134.2856	177.81	-	-	-
109	0 USP	110	156	110 - 156	0.75	6.56	4.92	4.92	480	0.013	21	5.80	5.33	0.00098	2.405	5.50	0.44	4.87	14.30	16.00	0.0010	Minor Industrial	13.61	2.20	13.61	2.20	10.91	4.54	5.0241	5.89	1786	56.48	YES
111	0 USP	112	113	112 - 113	0.75	8.62	6.47	6.47	420	0.013	18	7.63	7.00	0.00150	1.767	4.71	0.38	4.08	13.60	12.80	0.0024	Minor	12.65	2.29	12.65	2.29	14.96	8.46	5.1394	9.82	1513	73.83	YES
120	0 USP	121	119	121 - 119	0.75	3.53	2.65	2.65	145	0.013	18	8.53	8.04	0.00338	1.767	4.71	0.38	6.12	16.10	16.00	0.0010	Minor	19.91	1.76	19.91	1.76	4.71	2.66	3.3307	1.38	1513	47.85	YES
118		119	117	119 - 117	0.75	1.56	1.17	3.82	270	0.013	21	8.04	7.38	0.00244	2.405	5.50	0.44	7.86	16.00	14.60	0.0052	Minor	11.75	2.39	20.01	1.76	6.77	2.81	11.4404	0.00	1513	108.95	YES
116		117	115	117 - 115	0.75	4.12	3.09	6.91	165	0.013	24	7.38	7.06	0.00194	3.142	6.28	0.50	9.99	14.60	13.00	0.0097	Minor	16.17	1.99	20.10	1.75	12.22	3.89	22.3370	0.00	1513	148.99	YES
114		115	113	115 - 113	0.75	0.23	0.17	7.08	65	0.013	24	7.06	7.00	0.00092	3.142	6.28	0.50	6.89	13.00	12.80	0.0031	Minor	11.00	2.49	20.15	1.75	12.50	3.98	12.5824	0.00	1513	83.93	YES
122	2 USP	113	123	113 - 123	0.75	1.42	1.07	14.62	380	0.013	30	6.84	6.47	0.00103	4.909	7.85	0.63	13.19	12.80	14.30	0.0010	Minor	14.65	2.11	20.42	1.74	25.60	5.22	13.0057	12.59	1513	47.85	YES
124		123	126	123 - 126	0.75	1.84	1.38	16.00	220	0.013	36	6.31	6.03	0.00127	7.069	9.42	0.75	23.86	14.30	13.50	0.0036	Minor Industrial	11.00	2.49	20.47	1.74	27.98	3.96	40.3289	0.00	1786	107.70	YES
127		126	129	126 - 129	0.75	1.45	1.09	17.09	450	0.013	36	6.03	5.53	0.00111	7.069	9.42	0.75	22.29	13.50	12.90	0.0013	Minor Industrial	14.24	2.14	20.53	1.73	29.84	4.22	24.4204	5.42	1786	65.22	YES
135	0 USP	136	134	136 - 134	0.75	0.26	0.19	0.19	65	0.013	21	6.53	6.44	0.00138	2.405	5.50	0.44	5.91	12.90	12.80	0.0015	Minor	11.00	2.49	11.00	2.49	0.48	0.20	6.2317	0.00	1513	59.34	YES
139	0 USP	141	138	141 - 138	0.75	2.93	2.20	2.20	440	0.013	18	10.15	8.83	0.00300	1.767	4.71	0.38	5.77	14.50	13.40	0.0025	Minor	14.28	2.14	14.28	2.14	4.74	2.68	5.2663	0.00	1513	75.65	YES
137		138	134	138 - 134	0.75	1.66	1.24	3.44	405	0.013	21	8.83	7.44	0.00343	2.405	5.50	0.44	9.31	13.40	12.80	0.0015	Minor	13.85	2.18	14.36	2.13	7.40	3.08	6.1152	1.28	1513	58.24	YES
133	2 USP	134	132	134 - 132	0.75	2.29	1.72	5.35	80	0.013	21	5.78	5.67	0.00138	2.405	5.50	0.44	5.89	12.80	12.90	0.0010	Minor	15.61	2.03	16.56	1.96	10.59	4.40	5.0241	5.57	1513	47.85	YES
131		132	129	132 - 129	0.75	0.22	0.17	5.52	90	0.013	24	5.67	5.53	0.00156	3.142	6.28	0.50	8.95	12.90	12.90	0.0010	Minor	11.00	2.49	16.61	1.96	10.90	3.47	7.1731	3.73	1513	47.85	YES
130	2 USP	129	156	129 - 156	0.75	2.53	1.90	24.50	485	0.013	54	5.53	5.34	0.00039	15.904	14.14	1.13	39.03	12.90	16.00	0.0010	Minor Industrial	14.41	2.13	22.30	1.65	40.78	2.56	62.3533	0.00	1786	56.48	YES
142	0 USP	143	144	143 - 144	0.75	3.66	2.75	2.75	175	0.013	18	6.73	6.50	0.00131	1.767	4.71	0.38	3.82	12.50	12.10	0.0023	Minor	15.04	2.07	15.04	2.07	5.75	3.25	5.0356	0.71	1513	72.34	YES
145		144	146	144 - 146	0.75	1.91	1.43	4.18	35	0.013	24	6.50	5.88	0.01771	3.142	6.28	0.50	30.19	12.10	12.10	0.0010	Minor	15.04	2.07	15.10	2.07	8.72	2.78	7.1731	1.55	1513	47.85	YES
147		146	148	146 - 148

Appendix C

Hydrologic Calculations

HEC-1 Model for Jurgens Pump Station Inflow Hydrograph

Spreadsheet showing Routing through California Landing Park

```
1*************************************                                    *************************************
*                                   *                                    *                                   *
*  FLOOD HYDROGRAPH PACKAGE  (HEC-1)*                                    *   U.S. ARMY CORPS OF ENGINEERS    *
*            JUN   1998             *                                    *   HYDROLOGIC ENGINEERING CENTER   *
*          VERSION 4.1              *                                    *         609 SECOND STREET         *
*                                   *                                    *      DAVIS, CALIFORNIA 95616      *
* RUN DATE   28MAY09  TIME  16:23:26*                                    *          (916) 756-1104           *
*                                   *                                    *                                   *
*************************************                                    *************************************

X     X  XXXXXXX   XXXXX          X
X     X  X        X     X        XX
X     X  X        X               X
XXXXXXX  XXXX     X        XXXXX  X
X     X  X        X               X
X     X  X        X     X         X
X     X  XXXXXXX   XXXXX         XXX

THIS PROGRAM REPLACES ALL PREVIOUS VERSIONS OF HEC-1 KNOWN AS HEC1 (JAN 73), HEC1GS, HEC1DB, AND HEC1KW.

THE DEFINITIONS OF VARIABLES -RTIMP- AND -RTIOR- HAVE CHANGED FROM THOSE USED WITH THE 1973-STYLE INPUT STRUCTURE.
THE DEFINITION OF -AMSKK- ON RM-CARD WAS CHANGED WITH REVISIONS DATED 28 SEP 81. THIS IS THE FORTRAN77 VERSION
NEW OPTIONS: DAMBREAK OUTFLOW SUBMERGENCE , SINGLE EVENT DAMAGE CALCULATION, DSS:WRITE STAGE FREQUENCY,
DSS:READ TIME SERIES AT DESIRED CALCULATION INTERVAL   LOSS RATE:GREEN AND AMPT INFILTRATION
KINEMATIC WAVE: NEW FINITE DIFFERENCE ALGORITHM

1                                          HEC-1 INPUT                                                    PAGE  1

      LINE          ID.......1.......2.......3.......4.......5.......6.......7.......8.......9......10

        1           ID   Stevens Creek Hydrograph Routing - Jurgens Pump Station in Milpitas
        2           ID   Emily Caldwell, Schaaf & Wheeler, April 2009
        3           IT       5 20NOV98       0     288
        4           IO       1
                    *

        5           KK    DRAINAGE TO JURGENS PS
        6           KM    STORM DRAIN HYDROGRAPH
        7           BA    .671
        8           PB    4.71
        9           PI   .1412  0.1412  0.1412  0.1412  0.1412  0.1412  0.1412  0.1412  0.1412  0.1412
       10           PI   .1412  0.1412  0.1294  0.1294  0.1294  0.1294  0.1294  0.1294  0.1294  0.1294
       11           PI   .1294  0.1294  0.1294  0.1294   0.308   0.308   0.308   0.308   0.308   0.308
       12           PI    .308   0.308   0.308   0.308   0.308   0.308  0.5667  0.5667  0.5667  0.5667
       13           PI   .5667  0.5667  0.5667  0.5667  0.5667  0.5667  0.5667  0.5667  0.5051  0.5051
       14           PI   .5051  0.5051  0.5051  0.5051  0.5051  0.5051  0.5051  0.5051  0.5051  0.5051
       15           PI   .5252  0.5252  0.5252  0.5252  0.5252  0.5252  0.5252  0.5252  0.5252  0.5252
       16           PI   .5252  0.5252    4.76    4.76   1.554   1.554   1.554   1.554   1.085   1.085
       17           PI   1.085   1.085   1.085   1.085  0.5177  0.5177  0.5177  0.5177  0.5177  0.5177
       18           PI   .5177  0.5177  0.5177  0.5177  0.5177  0.5177  0.2763  0.2763  0.2763  0.2763
       19           PI   .2763  0.2763  0.2763  0.2763  0.2763  0.2763  0.2763  0.2763  0.2302  0.2302
       20           PI   .2302  0.2302  0.2302  0.2302  0.2302  0.2302  0.2302  0.2302  0.2302  0.2302
       21           PI   .3223  0.3223  0.3223  0.3223  0.3223  0.3223  0.3223  0.3223  0.3223  0.3223
       22           PI   .3223  0.3223  0.3799  0.3799  0.3799  0.3799  0.3799  0.3799  0.3799  0.3799
       23           PI   .3799  0.3799  0.3799  0.3799  0.2878  0.2878  0.2878  0.2878  0.2878  0.2878
       24           PI   .2878  0.2878  0.2878  0.2878  0.2878  0.2878  0.2993  0.2993  0.2993  0.2993
       25           PI   .2993  0.2993  0.2993  0.2993  0.2993  0.2993  0.2993  0.2993  0.2118  0.2118
       26           PI   .2118  0.2118  0.2118  0.2118  0.2118  0.2118  0.2118  0.2118  0.2118  0.2118
       27           PI   .2353  0.2353  0.2353  0.2353  0.2353  0.2353  0.2353  0.2353  0.2353  0.2353
       28           PI   .2353  0.2353  0.2118  0.2118  0.2118  0.2118  0.2118  0.2118  0.2118  0.2118
       29           PI   .2118  0.2118  0.2118  0.2118  0.1177  0.1177  0.1177  0.1177  0.1177  0.1177
       30           PI   .1177  0.1177  0.1177  0.1177  0.1177  0.1177   0.153   0.153   0.153   0.153
       31           PI    .153   0.153   0.153   0.153   0.153   0.153   0.153   0.153  0.1647  0.1647
       32           PI   .1647  0.1647  0.1647  0.1647  0.1647  0.1647  0.1647  0.1647  0.1647  0.1647
       33           PI   .1412  0.1412  0.1412  0.1412  0.1412  0.1412  0.1412  0.1412  0.1412  0.1412
       34           PI   .1412  0.1412  0.3412  0.3412  0.3412  0.3412  0.3412  0.3412  0.3412  0.3412
       35           PI   .3412  0.3412  0.3412  0.3412  0.2706  0.2706  0.2706  0.2706  0.2706  0.2706
       36           PI   .2706  0.2706  0.2706  0.2706  0.2706  0.2706  0.1412  0.1412  0.1412  0.1412
       37           PI   .1412  0.1412  0.1412  0.1412  0.1412  0.1412  0.1412  0.1412
                    *
       38           UC     .51     .45
       39           LS       0      81      69
                    *

       40           KK    Pump Station
       41           KM    143 cfs subtracted from entire hydrograph
       42           RL     143
                    *

       43           KK    POND
       44           KM    DETENTION POND at Jergens Pump Station
       45           RS       1    ELEV   -12.5       0 ,
       46           SA   .0712   .8441  2.5520  6.6003 11.0294   24.51
       47           SE       8       9      10      11      12    13.1
       48           SS    12.7     612     2.5     1.5
                    *
1                                          HEC-1 INPUT                                                    PAGE  2

      LINE          ID.......1.......2.......3.......4.......5.......6.......7.......8.......9......10

       49           ZZ
1*************************************                                    *************************************
```

```
*                                        *                                                  *                                        *
*   FLOOD HYDROGRAPH PACKAGE  (HEC-1)    *                                                  *    U.S. ARMY CORPS OF ENGINEERS        *
*              JUN   1998                *                                                  *    HYDROLOGIC ENGINEERING CENTER       *
*           VERSION 4.1                  *                                                  *          609 SECOND STREET             *
*                                        *                                                  *       DAVIS, CALIFORNIA 95616          *
*  RUN DATE   28MAY09  TIME  16:23:26    *                                                  *          (916) 756-1104                *
*                                        *                                                  *                                        *
******************************************                                                  ******************************************


                        Stevens Creek Hydrograph Routing - Jurgens Pump Station in Milpitas
                        Emily Caldwell, Schaaf & Wheeler, April 2009

  4 IO          OUTPUT CONTROL VARIABLES
                      IPRNT           1  PRINT CONTROL
                      IPLOT           0  PLOT CONTROL
                      QSCAL          0.  HYDROGRAPH PLOT SCALE

    IT          HYDROGRAPH TIME DATA
                       NMIN           5  MINUTES IN COMPUTATION INTERVAL
                      IDATE    20NOV98  STARTING DATE
                      ITIME        0000  STARTING TIME
                         NQ         288  NUMBER OF HYDROGRAPH ORDINATES
                     NDDATE    20NOV98  ENDING DATE
                     NDTIME        2355  ENDING TIME
                      ICENT          19  CENTURY MARK

                 COMPUTATION INTERVAL     .08 HOURS
                      TOTAL TIME BASE   23.92 HOURS

          ENGLISH UNITS
               DRAINAGE AREA          SQUARE MILES
               PRECIPITATION DEPTH    INCHES
               LENGTH, ELEVATION      FEET
               FLOW                   CUBIC FEET PER SECOND
               STORAGE VOLUME         ACRE-FEET
               SURFACE AREA           ACRES
               TEMPERATURE            DEGREES FAHRENHEIT


*** *** *** *** *** *** *** *** *** *** *** *** *** *** *** *** *** *** *** *** *** *** *** *** *** *** *** *** *** *** *** *** *** *** ***


            **************
            *            *
  5 KK      *      DRAI  *     NAGE TO JURGENS PS
            *            *
            **************
                        STORM DRAIN HYDROGRAPH

               SUBBASIN RUNOFF DATA

  7 BA           SUBBASIN CHARACTERISTICS
                      TAREA         .67  SUBBASIN AREA

                 PRECIPITATION DATA

  8 PB                STORM        4.71  BASIN TOTAL PRECIPITATION

  9 PI             INCREMENTAL PRECIPITATION PATTERN
                      .14       .14       .14       .14       .14       .14       .14       .14       .14       .14
                      .14       .14       .13       .13       .13       .13       .13       .13       .13       .13
                      .13       .13       .13       .13       .31       .31       .31       .31       .31       .31
                      .31       .31       .31       .31       .31       .31       .57       .57       .57       .57
                      .57       .57       .57       .57       .57       .57       .57       .57       .51       .51
                      .51       .51       .51       .51       .51       .51       .51       .51       .51       .51
                      .53       .53       .53       .53       .53       .53       .53       .53       .53       .53
                      .53       .53      4.76      4.76      1.55      1.55      1.55      1.55      1.08      1.08
                     1.08      1.08      1.08      1.08       .52       .52       .52       .52       .52       .52
                      .52       .52       .52       .52       .52       .52       .28       .28       .28       .28
                      .28       .28       .28       .28       .28       .28       .28       .28       .23       .23
                      .23       .23       .23       .23       .23       .23       .23       .23       .23       .23
                      .32       .32       .32       .32       .32       .32       .32       .32       .32       .32
                      .32       .32       .38       .38       .38       .38       .38       .38       .38       .38
                      .38       .38       .38       .38       .29       .29       .29       .29       .29       .29
                      .29       .29       .29       .29       .29       .29       .30       .30       .30       .30
                      .30       .30       .30       .30       .30       .30       .30       .30       .21       .21
                      .21       .21       .21       .21       .21       .21       .21       .21       .21       .21
                      .24       .24       .24       .24       .24       .24       .24       .24       .24       .24
                      .24       .24       .21       .21       .21       .21       .21       .21       .21       .21
                      .21       .21       .21       .21       .12       .12       .12       .12       .12       .12
                      .12       .12       .12       .12       .12       .12       .15       .15       .15       .15
                      .15       .15       .15       .15       .15       .15       .15       .15       .16       .16
                      .16       .16       .16       .16       .16       .16       .16       .16       .16       .16
                      .14       .14       .14       .14       .14       .14       .14       .14       .14       .14
                      .14       .14       .34       .34       .34       .34       .34       .34       .34       .34
                      .34       .34       .34       .34       .27       .27       .27       .27       .27       .27
                      .27       .27       .27       .27       .27       .27       .14       .14       .14       .14
                      .14       .14       .14       .14       .14       .14       .14

 39 LS          SCS LOSS RATE
                      STRTL         .47  INITIAL ABSTRACTION
                     CRVNBR       81.00  CURVE NUMBER
                      RTIMP       69.00  PERCENT IMPERVIOUS AREA

 38 UC          CLARK UNITGRAPH
```

TC .51 TIME OF CONCENTRATION
R .45 STORAGE COEFFICIENT

SYNTHETIC ACCUMULATED-AREA VS. TIME CURVE WILL BE USED

***

UNIT HYDROGRAPH PARAMETERS
CLARK TC= .51 HR, R= .45 HR
SNYDER TP= .44 HR, CP= .59

UNIT HYDROGRAPH
32 END-OF-PERIOD ORDINATES

41.	151.	298.	444.	547.	579.	530.	442.	367.	305.
253.	210.	175.	145.	120.	100.	83.	69.	57.	48.
40.	33.	27.	23.	19.	16.	13.	11.	9.	7.
6.	5.								

****

HYDROGRAPH AT STATION DRAI

****

DA MON HRMN	ORD	RAIN	LOSS	EXCESS	COMP Q	*	DA MON HRMN	ORD	RAIN	LOSS	EXCESS	COMP Q
20 NOV 0000	1	.00	.00	.00	0.	*	20 NOV 1200	145	.02	.00	.02	83.
20 NOV 0005	2	.01	.00	.00	0.	*	20 NOV 1205	146	.01	.00	.01	84.
20 NOV 0010	3	.01	.00	.00	1.	*	20 NOV 1210	147	.01	.00	.01	84.
20 NOV 0015	4	.01	.00	.00	2.	*	20 NOV 1215	148	.01	.00	.01	83.
20 NOV 0020	5	.01	.00	.00	4.	*	20 NOV 1220	149	.01	.00	.01	81.
20 NOV 0025	6	.01	.00	.00	7.	*	20 NOV 1225	150	.01	.00	.01	79.
20 NOV 0030	7	.01	.00	.00	9.	*	20 NOV 1230	151	.01	.00	.01	77.
20 NOV 0035	8	.01	.00	.00	12.	*	20 NOV 1235	152	.01	.00	.01	75.
20 NOV 0040	9	.01	.00	.00	14.	*	20 NOV 1240	153	.01	.00	.01	74.
20 NOV 0045	10	.01	.00	.00	16.	*	20 NOV 1245	154	.01	.00	.01	72.
20 NOV 0050	11	.01	.00	.00	17.	*	20 NOV 1250	155	.01	.00	.01	71.
20 NOV 0055	12	.01	.00	.00	18.	*	20 NOV 1255	156	.01	.00	.01	70.
20 NOV 0100	13	.01	.00	.00	19.	*	20 NOV 1300	157	.01	.00	.01	70.
20 NOV 0105	14	.01	.00	.00	20.	*	20 NOV 1305	158	.01	.00	.01	69.
20 NOV 0110	15	.01	.00	.00	21.	*	20 NOV 1310	159	.01	.00	.01	69.
20 NOV 0115	16	.01	.00	.00	21.	*	20 NOV 1315	160	.01	.00	.01	68.
20 NOV 0120	17	.01	.00	.00	21.	*	20 NOV 1320	161	.01	.00	.01	68.
20 NOV 0125	18	.01	.00	.00	21.	*	20 NOV 1325	162	.01	.00	.01	68.
20 NOV 0130	19	.01	.00	.00	22.	*	20 NOV 1330	163	.01	.00	.01	68.
20 NOV 0135	20	.01	.00	.00	22.	*	20 NOV 1335	164	.01	.00	.01	68.
20 NOV 0140	21	.01	.00	.00	22.	*	20 NOV 1340	165	.01	.00	.01	68.
20 NOV 0145	22	.01	.00	.00	22.	*	20 NOV 1345	166	.01	.00	.01	68.
20 NOV 0150	23	.01	.00	.00	22.	*	20 NOV 1350	167	.01	.00	.01	68.
20 NOV 0155	24	.01	.00	.00	22.	*	20 NOV 1355	168	.01	.00	.01	68.
20 NOV 0200	25	.01	.00	.00	22.	*	20 NOV 1400	169	.01	.00	.01	69.
20 NOV 0205	26	.01	.00	.01	22.	*	20 NOV 1405	170	.01	.00	.01	68.
20 NOV 0210	27	.01	.00	.01	23.	*	20 NOV 1410	171	.01	.00	.01	68.
20 NOV 0215	28	.01	.00	.01	25.	*	20 NOV 1415	172	.01	.00	.01	67.
20 NOV 0220	29	.01	.00	.01	27.	*	20 NOV 1420	173	.01	.00	.01	65.
20 NOV 0225	30	.01	.00	.01	30.	*	20 NOV 1425	174	.01	.00	.01	63.
20 NOV 0230	31	.01	.00	.01	34.	*	20 NOV 1430	175	.01	.00	.01	61.
20 NOV 0235	32	.01	.00	.01	37.	*	20 NOV 1435	176	.01	.00	.01	59.
20 NOV 0240	33	.01	.00	.01	39.	*	20 NOV 1440	177	.01	.00	.01	57.
20 NOV 0245	34	.01	.00	.01	42.	*	20 NOV 1445	178	.01	.00	.01	56.
20 NOV 0250	35	.01	.00	.01	43.	*	20 NOV 1450	179	.01	.00	.01	54.
20 NOV 0255	36	.01	.00	.01	45.	*	20 NOV 1455	180	.01	.00	.01	53.
20 NOV 0300	37	.01	.00	.01	46.	*	20 NOV 1500	181	.01	.00	.01	53.
20 NOV 0305	38	.03	.01	.02	47.	*	20 NOV 1505	182	.01	.00	.01	52.
20 NOV 0310	39	.03	.01	.02	49.	*	20 NOV 1510	183	.01	.00	.01	52.
20 NOV 0315	40	.03	.01	.02	53.	*	20 NOV 1515	184	.01	.00	.01	51.
20 NOV 0320	41	.03	.01	.02	57.	*	20 NOV 1520	185	.01	.00	.01	52.
20 NOV 0325	42	.03	.01	.02	62.	*	20 NOV 1525	186	.01	.00	.01	52.
20 NOV 0330	43	.03	.01	.02	67.	*	20 NOV 1530	187	.01	.00	.01	52.
20 NOV 0335	44	.03	.01	.02	72.	*	20 NOV 1535	188	.01	.00	.01	53.
20 NOV 0340	45	.03	.01	.02	76.	*	20 NOV 1540	189	.01	.00	.01	53.
20 NOV 0345	46	.03	.01	.02	80.	*	20 NOV 1545	190	.01	.00	.01	53.
20 NOV 0350	47	.03	.01	.02	83.	*	20 NOV 1550	191	.01	.00	.01	53.
20 NOV 0355	48	.03	.01	.02	85.	*	20 NOV 1555	192	.01	.00	.01	53.
20 NOV 0400	49	.03	.01	.02	87.	*	20 NOV 1600	193	.01	.00	.01	54.
20 NOV 0405	50	.02	.01	.02	89.	*	20 NOV 1605	194	.01	.00	.01	54.
20 NOV 0410	51	.02	.01	.02	91.	*	20 NOV 1610	195	.01	.00	.01	54.
20 NOV 0415	52	.02	.01	.02	92.	*	20 NOV 1615	196	.01	.00	.01	53.
20 NOV 0420	53	.02	.01	.02	93.	*	20 NOV 1620	197	.01	.00	.01	53.
20 NOV 0425	54	.02	.01	.02	93.	*	20 NOV 1625	198	.01	.00	.01	52.
20 NOV 0430	55	.02	.01	.02	93.	*	20 NOV 1630	199	.01	.00	.01	52.
20 NOV 0435	56	.02	.01	.02	93.	*	20 NOV 1635	200	.01	.00	.01	51.
20 NOV 0440	57	.02	.01	.02	93.	*	20 NOV 1640	201	.01	.00	.01	51.
20 NOV 0445	58	.02	.01	.02	93.	*	20 NOV 1645	202	.01	.00	.01	51.
20 NOV 0450	59	.02	.01	.02	93.	*	20 NOV 1650	203	.01	.00	.01	50.
20 NOV 0455	60	.02	.01	.02	93.	*	20 NOV 1655	204	.01	.00	.01	50.
20 NOV 0500	61	.02	.01	.02	94.	*	20 NOV 1700	205	.01	.00	.01	50.
20 NOV 0505	62	.02	.01	.02	94.	*	20 NOV 1705	206	.01	.00	.01	50.
20 NOV 0510	63	.02	.01	.02	94.	*	20 NOV 1710	207	.01	.00	.01	49.
20 NOV 0515	64	.02	.01	.02	95.	*	20 NOV 1715	208	.01	.00	.01	48.
20 NOV 0520	65	.02	.01	.02	96.	*	20 NOV 1720	209	.01	.00	.01	46.
20 NOV 0525	66	.02	.00	.02	97.	*	20 NOV 1725	210	.01	.00	.01	43.
20 NOV 0530	67	.02	.00	.02	97.	*	20 NOV 1730	211	.01	.00	.01	41.
20 NOV 0535	68	.02	.00	.02	98.	*	20 NOV 1735	212	.01	.00	.01	38.
20 NOV 0540	69	.02	.00	.02	99.	*	20 NOV 1740	213	.01	.00	.01	37.
20 NOV 0545	70	.02	.00	.02	100.	*	20 NOV 1745	214	.01	.00	.01	35.
20 NOV 0550	71	.02	.00	.02	100.	*	20 NOV 1750	215	.01	.00	.01	34.
20 NOV 0555	72	.02	.00	.02	101.	*	20 NOV 1755	216	.01	.00	.01	33.
20 NOV 0600	73	.02	.00	.02	101.	*	20 NOV 1800	217	.01	.00	.01	32.
20 NOV 0605	74	.22	.04	.19	109.	*	20 NOV 1805	218	.01	.00	.01	31.

20 NOV 0610	75	.22	.03	.19	135.	*	20 NOV 1810	219	.01	.00	.01	31.
20 NOV 0615	76	.07	.01	.06	180.	*	20 NOV 1815	220	.01	.00	.01	30.
20 NOV 0620	77	.07	.01	.06	237.	*	20 NOV 1820	221	.01	.00	.01	31.
20 NOV 0625	78	.07	.01	.06	293.	*	20 NOV 1825	222	.01	.00	.01	31.
20 NOV 0630	79	.07	.01	.06	335.	*	20 NOV 1830	223	.01	.00	.01	32.
20 NOV 0635	80	.05	.01	.05	356.	*	20 NOV 1835	224	.01	.00	.01	32.
20 NOV 0640	81	.05	.01	.05	356.	*	20 NOV 1840	225	.01	.00	.01	33.
20 NOV 0645	82	.05	.01	.05	346.	*	20 NOV 1845	226	.01	.00	.01	33.
20 NOV 0650	83	.05	.01	.05	334.	*	20 NOV 1850	227	.01	.00	.01	34.
20 NOV 0655	84	.05	.01	.05	321.	*	20 NOV 1855	228	.01	.00	.01	34.
20 NOV 0700	85	.05	.01	.05	308.	*	20 NOV 1900	229	.01	.00	.01	34.
20 NOV 0705	86	.02	.00	.02	295.	*	20 NOV 1905	230	.01	.00	.01	35.
20 NOV 0710	87	.02	.00	.02	281.	*	20 NOV 1910	231	.01	.00	.01	35.
20 NOV 0715	88	.02	.00	.02	266.	*	20 NOV 1915	232	.01	.00	.01	35.
20 NOV 0720	89	.02	.00	.02	249.	*	20 NOV 1920	233	.01	.00	.01	35.
20 NOV 0725	90	.02	.00	.02	230.	*	20 NOV 1925	234	.01	.00	.01	36.
20 NOV 0730	91	.02	.00	.02	212.	*	20 NOV 1930	235	.01	.00	.01	36.
20 NOV 0735	92	.02	.00	.02	195.	*	20 NOV 1935	236	.01	.00	.01	37.
20 NOV 0740	93	.02	.00	.02	182.	*	20 NOV 1940	237	.01	.00	.01	37.
20 NOV 0745	94	.02	.00	.02	170.	*	20 NOV 1945	238	.01	.00	.01	37.
20 NOV 0750	95	.02	.00	.02	161.	*	20 NOV 1950	239	.01	.00	.01	37.
20 NOV 0755	96	.02	.00	.02	153.	*	20 NOV 1955	240	.01	.00	.01	37.
20 NOV 0800	97	.02	.00	.02	147.	*	20 NOV 2000	241	.01	.00	.01	38.
20 NOV 0805	98	.01	.00	.01	141.	*	20 NOV 2005	242	.01	.00	.01	38.
20 NOV 0810	99	.01	.00	.01	135.	*	20 NOV 2010	243	.01	.00	.01	38.
20 NOV 0815	100	.01	.00	.01	128.	*	20 NOV 2015	244	.01	.00	.01	37.
20 NOV 0820	101	.01	.00	.01	121.	*	20 NOV 2020	245	.01	.00	.01	37.
20 NOV 0825	102	.01	.00	.01	112.	*	20 NOV 2025	246	.01	.00	.01	37.
20 NOV 0830	103	.01	.00	.01	104.	*	20 NOV 2030	247	.01	.00	.01	36.
20 NOV 0835	104	.01	.00	.01	97.	*	20 NOV 2035	248	.01	.00	.01	35.
20 NOV 0840	105	.01	.00	.01	91.	*	20 NOV 2040	249	.01	.00	.01	35.
20 NOV 0845	106	.01	.00	.01	85.	*	20 NOV 2045	250	.01	.00	.01	35.
20 NOV 0850	107	.01	.00	.01	81.	*	20 NOV 2050	251	.01	.00	.01	34.
20 NOV 0855	108	.01	.00	.01	77.	*	20 NOV 2055	252	.01	.00	.01	34.
20 NOV 0900	109	.01	.00	.01	74.	*	20 NOV 2100	253	.01	.00	.01	34.
20 NOV 0905	110	.01	.00	.01	72.	*	20 NOV 2105	254	.02	.00	.02	34.
20 NOV 0910	111	.01	.00	.01	70.	*	20 NOV 2110	255	.02	.00	.02	35.
20 NOV 0915	112	.01	.00	.01	68.	*	20 NOV 2115	256	.02	.00	.02	38.
20 NOV 0920	113	.01	.00	.01	65.	*	20 NOV 2120	257	.02	.00	.02	42.
20 NOV 0925	114	.01	.00	.01	63.	*	20 NOV 2125	258	.02	.00	.02	47.
20 NOV 0930	115	.01	.00	.01	61.	*	20 NOV 2130	259	.02	.00	.02	52.
20 NOV 0935	116	.01	.00	.01	60.	*	20 NOV 2135	260	.02	.00	.02	57.
20 NOV 0940	117	.01	.00	.01	58.	*	20 NOV 2140	261	.02	.00	.02	60.
20 NOV 0945	118	.01	.00	.01	57.	*	20 NOV 2145	262	.02	.00	.02	64.
20 NOV 0950	119	.01	.00	.01	56.	*	20 NOV 2150	263	.02	.00	.02	66.
20 NOV 0955	120	.01	.00	.01	55.	*	20 NOV 2155	264	.02	.00	.02	69.
20 NOV 1000	121	.01	.00	.01	55.	*	20 NOV 2200	265	.02	.00	.02	71.
20 NOV 1005	122	.02	.00	.01	54.	*	20 NOV 2205	266	.01	.00	.01	72.
20 NOV 1010	123	.02	.00	.01	54.	*	20 NOV 2210	267	.01	.00	.01	73.
20 NOV 1015	124	.02	.00	.01	55.	*	20 NOV 2215	268	.01	.00	.01	73.
20 NOV 1020	125	.02	.00	.01	57.	*	20 NOV 2220	269	.01	.00	.01	73.
20 NOV 1025	126	.02	.00	.01	59.	*	20 NOV 2225	270	.01	.00	.01	72.
20 NOV 1030	127	.02	.00	.01	61.	*	20 NOV 2230	271	.01	.00	.01	70.
20 NOV 1035	128	.02	.00	.01	63.	*	20 NOV 2235	272	.01	.00	.01	69.
20 NOV 1040	129	.02	.00	.01	65.	*	20 NOV 2240	273	.01	.00	.01	68.
20 NOV 1045	130	.02	.00	.01	66.	*	20 NOV 2245	274	.01	.00	.01	67.
20 NOV 1050	131	.02	.00	.01	67.	*	20 NOV 2250	275	.01	.00	.01	67.
20 NOV 1055	132	.02	.00	.01	68.	*	20 NOV 2255	276	.01	.00	.01	66.
20 NOV 1100	133	.02	.00	.01	69.	*	20 NOV 2300	277	.01	.00	.01	66.
20 NOV 1105	134	.02	.00	.02	70.	*	20 NOV 2305	278	.01	.00	.01	65.
20 NOV 1110	135	.02	.00	.02	71.	*	20 NOV 2310	279	.01	.00	.01	64.
20 NOV 1115	136	.02	.00	.02	72.	*	20 NOV 2315	280	.01	.00	.01	62.
20 NOV 1120	137	.02	.00	.02	73.	*	20 NOV 2320	281	.01	.00	.01	59.
20 NOV 1125	138	.02	.00	.02	75.	*	20 NOV 2325	282	.01	.00	.01	56.
20 NOV 1130	139	.02	.00	.02	77.	*	20 NOV 2330	283	.01	.00	.01	52.
20 NOV 1135	140	.02	.00	.02	79.	*	20 NOV 2335	284	.01	.00	.01	49.
20 NOV 1140	141	.02	.00	.02	80.	*	20 NOV 2340	285	.01	.00	.01	46.
20 NOV 1145	142	.02	.00	.02	81.	*	20 NOV 2345	286	.01	.00	.01	44.
20 NOV 1150	143	.02	.00	.02	82.	*	20 NOV 2350	287	.01	.00	.01	42.
20 NOV 1155	144	.02	.00	.02	83.	*	20 NOV 2355	288	.01	.00	.01	41.
						*						

****

TOTAL RAINFALL = 4.71, TOTAL LOSS = .61, TOTAL EXCESS = 4.10

PEAK FLOW	TIME		MAXIMUM AVERAGE FLOW			
			6-HR	24-HR	72-HR	23.92-HR
+ (CFS)	(HR)	(CFS)				
+ 356.	6.58		143.	73.	73.	73.
		(INCHES)	1.976	4.017	4.017	4.017
		(AC-FT)	71.	144.	144.	144.

CUMULATIVE AREA = .67 SQ MI

*** ***

```
              **************
              *            *
  40 KK       *    Pump    *      Station
              *            *
              **************
```

143 cfs subtracted from entire hydrograph

HYDROGRAPH ROUTING DATA

```
42 RL          ROUTING LOSSES
                    QLOSS      143.00  INITIAL LOSS
                    CLOSS         .00  ADDITIONAL FRACTION LOST

 0 RM          MUSKINGUM ROUTING
                    NSTPS          0 NUMBER OF SUBREACHES
                    AMSKK        .00 MUSKINGUM K
                       X         .00 MUSKINGUM X
```

***

HYDROGRAPH AT STATION Pump

DA MON HRMN	ORD	FLOW	DA MON HRMN	ORD	FLOW	DA MON HRMN	ORD	FLOW	DA MON HRMN	ORD	FLOW
20 NOV 0000	1	0.	20 NOV 0600	73	0.	20 NOV 1200	145	0.	20 NOV 1800	217	0.
20 NOV 0005	2	0.	20 NOV 0605	74	0.	20 NOV 1205	146	0.	20 NOV 1805	218	0.
20 NOV 0010	3	0.	20 NOV 0610	75	0.	20 NOV 1210	147	0.	20 NOV 1810	219	0.
20 NOV 0015	4	0.	20 NOV 0615	76	37.	20 NOV 1215	148	0.	20 NOV 1815	220	0.
20 NOV 0020	5	0.	20 NOV 0620	77	94.	20 NOV 1220	149	0.	20 NOV 1820	221	0.
20 NOV 0025	6	0.	20 NOV 0625	78	150.	20 NOV 1225	150	0.	20 NOV 1825	222	0.
20 NOV 0030	7	0.	20 NOV 0630	79	192.	20 NOV 1230	151	0.	20 NOV 1830	223	0.
20 NOV 0035	8	0.	20 NOV 0635	80	213.	20 NOV 1235	152	0.	20 NOV 1835	224	0.
20 NOV 0040	9	0.	20 NOV 0640	81	213.	20 NOV 1240	153	0.	20 NOV 1840	225	0.
20 NOV 0045	10	0.	20 NOV 0645	82	203.	20 NOV 1245	154	0.	20 NOV 1845	226	0.
20 NOV 0050	11	0.	20 NOV 0650	83	191.	20 NOV 1250	155	0.	20 NOV 1850	227	0.
20 NOV 0055	12	0.	20 NOV 0655	84	178.	20 NOV 1255	156	0.	20 NOV 1855	228	0.
20 NOV 0100	13	0.	20 NOV 0700	85	165.	20 NOV 1300	157	0.	20 NOV 1900	229	0.
20 NOV 0105	14	0.	20 NOV 0705	86	152.	20 NOV 1305	158	0.	20 NOV 1905	230	0.
20 NOV 0110	15	0.	20 NOV 0710	87	138.	20 NOV 1310	159	0.	20 NOV 1910	231	0.
20 NOV 0115	16	0.	20 NOV 0715	88	123.	20 NOV 1315	160	0.	20 NOV 1915	232	0.
20 NOV 0120	17	0.	20 NOV 0720	89	106.	20 NOV 1320	161	0.	20 NOV 1920	233	0.
20 NOV 0125	18	0.	20 NOV 0725	90	87.	20 NOV 1325	162	0.	20 NOV 1925	234	0.
20 NOV 0130	19	0.	20 NOV 0730	91	69.	20 NOV 1330	163	0.	20 NOV 1930	235	0.
20 NOV 0135	20	0.	20 NOV 0735	92	52.	20 NOV 1335	164	0.	20 NOV 1935	236	0.
20 NOV 0140	21	0.	20 NOV 0740	93	39.	20 NOV 1340	165	0.	20 NOV 1940	237	0.
20 NOV 0145	22	0.	20 NOV 0745	94	27.	20 NOV 1345	166	0.	20 NOV 1945	238	0.
20 NOV 0150	23	0.	20 NOV 0750	95	18.	20 NOV 1350	167	0.	20 NOV 1950	239	0.
20 NOV 0155	24	0.	20 NOV 0755	96	10.	20 NOV 1355	168	0.	20 NOV 1955	240	0.
20 NOV 0200	25	0.	20 NOV 0800	97	4.	20 NOV 1400	169	0.	20 NOV 2000	241	0.
20 NOV 0205	26	0.	20 NOV 0805	98	0.	20 NOV 1405	170	0.	20 NOV 2005	242	0.
20 NOV 0210	27	0.	20 NOV 0810	99	0.	20 NOV 1410	171	0.	20 NOV 2010	243	0.
20 NOV 0215	28	0.	20 NOV 0815	100	0.	20 NOV 1415	172	0.	20 NOV 2015	244	0.
20 NOV 0220	29	0.	20 NOV 0820	101	0.	20 NOV 1420	173	0.	20 NOV 2020	245	0.
20 NOV 0225	30	0.	20 NOV 0825	102	0.	20 NOV 1425	174	0.	20 NOV 2025	246	0.
20 NOV 0230	31	0.	20 NOV 0830	103	0.	20 NOV 1430	175	0.	20 NOV 2030	247	0.
20 NOV 0235	32	0.	20 NOV 0835	104	0.	20 NOV 1435	176	0.	20 NOV 2035	248	0.
20 NOV 0240	33	0.	20 NOV 0840	105	0.	20 NOV 1440	177	0.	20 NOV 2040	249	0.
20 NOV 0245	34	0.	20 NOV 0845	106	0.	20 NOV 1445	178	0.	20 NOV 2045	250	0.
20 NOV 0250	35	0.	20 NOV 0850	107	0.	20 NOV 1450	179	0.	20 NOV 2050	251	0.
20 NOV 0255	36	0.	20 NOV 0855	108	0.	20 NOV 1455	180	0.	20 NOV 2055	252	0.
20 NOV 0300	37	0.	20 NOV 0900	109	0.	20 NOV 1500	181	0.	20 NOV 2100	253	0.
20 NOV 0305	38	0.	20 NOV 0905	110	0.	20 NOV 1505	182	0.	20 NOV 2105	254	0.
20 NOV 0310	39	0.	20 NOV 0910	111	0.	20 NOV 1510	183	0.	20 NOV 2110	255	0.
20 NOV 0315	40	0.	20 NOV 0915	112	0.	20 NOV 1515	184	0.	20 NOV 2115	256	0.
20 NOV 0320	41	0.	20 NOV 0920	113	0.	20 NOV 1520	185	0.	20 NOV 2120	257	0.
20 NOV 0325	42	0.	20 NOV 0925	114	0.	20 NOV 1525	186	0.	20 NOV 2125	258	0.
20 NOV 0330	43	0.	20 NOV 0930	115	0.	20 NOV 1530	187	0.	20 NOV 2130	259	0.
20 NOV 0335	44	0.	20 NOV 0935	116	0.	20 NOV 1535	188	0.	20 NOV 2135	260	0.
20 NOV 0340	45	0.	20 NOV 0940	117	0.	20 NOV 1540	189	0.	20 NOV 2140	261	0.
20 NOV 0345	46	0.	20 NOV 0945	118	0.	20 NOV 1545	190	0.	20 NOV 2145	262	0.
20 NOV 0350	47	0.	20 NOV 0950	119	0.	20 NOV 1550	191	0.	20 NOV 2150	263	0.
20 NOV 0355	48	0.	20 NOV 0955	120	0.	20 NOV 1555	192	0.	20 NOV 2155	264	0.
20 NOV 0400	49	0.	20 NOV 1000	121	0.	20 NOV 1600	193	0.	20 NOV 2200	265	0.
20 NOV 0405	50	0.	20 NOV 1005	122	0.	20 NOV 1605	194	0.	20 NOV 2205	266	0.
20 NOV 0410	51	0.	20 NOV 1010	123	0.	20 NOV 1610	195	0.	20 NOV 2210	267	0.
20 NOV 0415	52	0.	20 NOV 1015	124	0.	20 NOV 1615	196	0.	20 NOV 2215	268	0.
20 NOV 0420	53	0.	20 NOV 1020	125	0.	20 NOV 1620	197	0.	20 NOV 2220	269	0.
20 NOV 0425	54	0.	20 NOV 1025	126	0.	20 NOV 1625	198	0.	20 NOV 2225	270	0.
20 NOV 0430	55	0.	20 NOV 1030	127	0.	20 NOV 1630	199	0.	20 NOV 2230	271	0.
20 NOV 0435	56	0.	20 NOV 1035	128	0.	20 NOV 1635	200	0.	20 NOV 2235	272	0.
20 NOV 0440	57	0.	20 NOV 1040	129	0.	20 NOV 1640	201	0.	20 NOV 2240	273	0.
20 NOV 0445	58	0.	20 NOV 1045	130	0.	20 NOV 1645	202	0.	20 NOV 2245	274	0.
20 NOV 0450	59	0.	20 NOV 1050	131	0.	20 NOV 1650	203	0.	20 NOV 2250	275	0.
20 NOV 0455	60	0.	20 NOV 1055	132	0.	20 NOV 1655	204	0.	20 NOV 2255	276	0.
20 NOV 0500	61	0.	20 NOV 1100	133	0.	20 NOV 1700	205	0.	20 NOV 2300	277	0.
20 NOV 0505	62	0.	20 NOV 1105	134	0.	20 NOV 1705	206	0.	20 NOV 2305	278	0.
20 NOV 0510	63	0.	20 NOV 1110	135	0.	20 NOV 1710	207	0.	20 NOV 2310	279	0.
20 NOV 0515	64	0.	20 NOV 1115	136	0.	20 NOV 1715	208	0.	20 NOV 2315	280	0.
20 NOV 0520	65	0.	20 NOV 1120	137	0.	20 NOV 1720	209	0.	20 NOV 2320	281	0.
20 NOV 0525	66	0.	20 NOV 1125	138	0.	20 NOV 1725	210	0.	20 NOV 2325	282	0.
20 NOV 0530	67	0.	20 NOV 1130	139	0.	20 NOV 1730	211	0.	20 NOV 2330	283	0.
20 NOV 0535	68	0.	20 NOV 1135	140	0.	20 NOV 1735	212	0.	20 NOV 2335	284	0.
20 NOV 0540	69	0.	20 NOV 1140	141	0.	20 NOV 1740	213	0.	20 NOV 2340	285	0.
20 NOV 0545	70	0.	20 NOV 1145	142	0.	20 NOV 1745	214	0.	20 NOV 2345	286	0.
20 NOV 0550	71	0.	20 NOV 1150	143	0.	20 NOV 1750	215	0.	20 NOV 2350	287	0.
20 NOV 0555	72	0.	20 NOV 1155	144	0.	20 NOV 1755	216	0.	20 NOV 2355	288	0.

	PEAK FLOW (CFS)	TIME (HR)		MAXIMUM AVERAGE FLOW 6-HR	24-HR	72-HR	23.92-HR
+	213.	6.58	(CFS)	34.	9.	9.	9.
			(INCHES)	.474	.474	.474	.474

```
                    (AC-FT)        17.          17.          17.          17.

                    CUMULATIVE AREA =      .67 SQ MI


*** *** *** *** *** *** *** *** *** *** *** *** *** *** *** *** *** *** *** *** *** *** *** *** *** *** *** *** *** *** *** *** *** *** *** ***

          **************
          *            *
 43 KK    *      POND  *
          *            *
          **************
                    DETENTION POND at Jergens Pump Station

            HYDROGRAPH ROUTING DATA

 42 RL          ROUTING LOSSES
                      QLOSS          .00  INITIAL LOSS
                      CLOSS          .00  ADDITIONAL FRACTION LOST

 45 RS          STORAGE ROUTING
                      NSTPS            1  NUMBER OF SUBREACHES
                       ITYP         ELEV  TYPE OF INITIAL CONDITION
                     RSVRIC       -12.50  INITIAL CONDITION
                          X          .00 WORKING R AND D COEFFICIENT

 46 SA              AREA          .1        .8       2.6       6.6      11.0      24.5

 47 SE          ELEVATION        8.00      9.00     10.00     11.00     12.00     13.10

 48 SS          SPILLWAY
                       CREL       12.70  SPILLWAY CREST ELEVATION
                      SPWID      612.00  SPILLWAY WIDTH
                       COQW        2.50  WEIR COEFFICIENT
                       EXPW        1.50  EXPONENT OF HEAD

                                                    ***

                                        COMPUTED STORAGE-ELEVATION DATA

            STORAGE        .00       .39      2.01      6.43     15.15     34.21
          ELEVATION       8.00      9.00     10.00     11.00     12.00     13.10

                                        COMPUTED OUTFLOW-ELEVATION DATA

            OUTFLOW        .00       .00       .07       .53      1.79      4.25      8.30     14.34     22.76     33.98
          ELEVATION       8.00     12.70     12.70     12.70     12.71     12.72     12.73     12.74     12.76     12.78

            OUTFLOW      48.38     66.37     88.34    114.69    145.81    182.12    224.00    271.85    326.07    387.06
          ELEVATION      12.80     12.82     12.85     12.88     12.91     12.94     12.98     13.02     13.06     13.10

                                      COMPUTED STORAGE-OUTFLOW-ELEVATION DATA

            STORAGE        .00       .39      2.01      6.43     15.15     25.53     25.74     26.12     26.39     26.70
            OUTFLOW        .00       .00       .00       .00       .00       .00      1.79      8.30     14.34     22.76
          ELEVATION       8.00      9.00     10.00     11.00     12.00     12.70     12.71     12.73     12.74     12.76

            STORAGE      27.07     27.49     27.97     28.51     29.11     29.78     30.51     31.32     32.20     33.16
            OUTFLOW      33.98     48.38     66.37     88.34    114.69    145.81    182.12    224.00    271.85    326.07
          ELEVATION      12.78     12.80     12.82     12.85     12.88     12.91     12.94     12.98     13.02     13.06

            STORAGE      34.21
            OUTFLOW     387.06
          ELEVATION      13.10
*************************************************************************************************************************************

                                        HYDROGRAPH AT STATION     POND

*************************************************************************************************************************************
                                    *                                    *                                    *
 DA MON HRMN ORD  OUTFLOW  STORAGE   STAGE * DA MON HRMN ORD  OUTFLOW  STORAGE   STAGE * DA MON HRMN ORD  OUTFLOW  STORAGE   STAGE
                                    *                                    *
 20 NOV 0000   1       0.       .4     9.0 * 20 NOV 0800  97       0.     17.3    12.1 * 20 NOV 1600 193       0.     17.3    12.1
 20 NOV 0005   2       0.       .4     9.0 * 20 NOV 0805  98       0.     17.3    12.1 * 20 NOV 1605 194       0.     17.3    12.1
 20 NOV 0010   3       0.       .4     9.0 * 20 NOV 0810  99       0.     17.3    12.1 * 20 NOV 1610 195       0.     17.3    12.1
 20 NOV 0015   4       0.       .4     9.0 * 20 NOV 0815 100       0.     17.3    12.1 * 20 NOV 1615 196       0.     17.3    12.1
 20 NOV 0020   5       0.       .4     9.0 * 20 NOV 0820 101       0.     17.3    12.1 * 20 NOV 1620 197       0.     17.3    12.1
 20 NOV 0025   6       0.       .4     9.0 * 20 NOV 0825 102       0.     17.3    12.1 * 20 NOV 1625 198       0.     17.3    12.1
 20 NOV 0030   7       0.       .4     9.0 * 20 NOV 0830 103       0.     17.3    12.1 * 20 NOV 1630 199       0.     17.3    12.1
 20 NOV 0035   8       0.       .4     9.0 * 20 NOV 0835 104       0.     17.3    12.1 * 20 NOV 1635 200       0.     17.3    12.1
 20 NOV 0040   9       0.       .4     9.0 * 20 NOV 0840 105       0.     17.3    12.1 * 20 NOV 1640 201       0.     17.3    12.1
 20 NOV 0045  10       0.       .4     9.0 * 20 NOV 0845 106       0.     17.3    12.1 * 20 NOV 1645 202       0.     17.3    12.1
 20 NOV 0050  11       0.       .4     9.0 * 20 NOV 0850 107       0.     17.3    12.1 * 20 NOV 1650 203       0.     17.3    12.1
 20 NOV 0055  12       0.       .4     9.0 * 20 NOV 0855 108       0.     17.3    12.1 * 20 NOV 1655 204       0.     17.3    12.1
 20 NOV 0100  13       0.       .4     9.0 * 20 NOV 0900 109       0.     17.3    12.1 * 20 NOV 1700 205       0.     17.3    12.1
 20 NOV 0105  14       0.       .4     9.0 * 20 NOV 0905 110'      0.     17.3    12.1 * 20 NOV 1705 206       0.     17.3    12.1
 20 NOV 0110  15       0.       .4     9.0 * 20 NOV 0910 111       0.     17.3    12.1 * 20 NOV 1710 207       0.     17.3    12.1
 20 NOV 0115  16       0.       .4     9.0 * 20 NOV 0915 112       0.     17.3    12.1 * 20 NOV 1715 208       0.     17.3    12.1
 20 NOV 0120  17       0.       .4     9.0 * 20 NOV 0920 113       0.     17.3    12.1 * 20 NOV 1720 209       0.     17.3    12.1
 20 NOV 0125  18       0.       .4     9.0 * 20 NOV 0925 114       0.     17.3    12.1 * 20 NOV 1725 210       0.     17.3    12.1
 20 NOV 0130  19       0.       .4     9.0 * 20 NOV 0930 115       0.     17.3    12.1 * 20 NOV 1730 211       0.     17.3    12.1
 20 NOV 0135  20       0.       .4     9.0 * 20 NOV 0935 116       0.     17.3    12.1 * 20 NOV 1735 212       0.     17.3    12.1
 20 NOV 0140  21       0.       .4     9.0 * 20 NOV 0940 117       0.     17.3    12.1 * 20 NOV 1740 213       0.     17.3    12.1
 20 NOV 0145  22       0.       .4     9.0 * 20 NOV 0945 118       0.     17.3    12.1 * 20 NOV 1745 214       0.     17.3    12.1
 20 NOV 0150  23       0.       .4     9.0 * 20 NOV 0950 119       0.     17.3    12.1 * 20 NOV 1750 215       0.     17.3    12.1
```

20	NOV	0155	24	0.	.4	9.0	*	20	NOV	0955	120	0.	17.3	12.1	*	20	NOV	1755	216	0.	17.3	12.1
20	NOV	0200	25	0.	.4	9.0	*	20	NOV	1000	121	0.	17.3	12.1	*	20	NOV	1800	217	0.	17.3	12.1
20	NOV	0205	26	0.	.4	9.0	*	20	NOV	1005	122	0.	17.3	12.1	*	20	NOV	1805	218	0.	17.3	12.1
20	NOV	0210	27	0.	.4	9.0	*	20	NOV	1010	123	0.	17.3	12.1	*	20	NOV	1810	219	0.	17.3	12.1
20	NOV	0215	28	0.	.4	9.0	*	20	NOV	1015	124	0.	17.3	12.1	*	20	NOV	1815	220	0.	17.3	12.1
20	NOV	0220	29	0.	.4	9.0	*	20	NOV	1020	125	0.	17.3	12.1	*	20	NOV	1820	221	0.	17.3	12.1
20	NOV	0225	30	0.	.4	9.0	*	20	NOV	1025	126	0.	17.3	12.1	*	20	NOV	1825	222	0.	17.3	12.1
20	NOV	0230	31	0.	.4	9.0	*	20	NOV	1030	127	0.	17.3	12.1	*	20	NOV	1830	223	0.	17.3	12.1
20	NOV	0235	32	0.	.4	9.0	*	20	NOV	1035	128	0.	17.3	12.1	*	20	NOV	1835	224	0.	17.3	12.1
20	NOV	0240	33	0.	.4	9.0	*	20	NOV	1040	129	0.	17.3	12.1	*	20	NOV	1840	225	0.	17.3	12.1
20	NOV	0245	34	0.	.4	9.0	*	20	NOV	1045	130	0.	17.3	12.1	*	20	NOV	1845	226	0.	17.3	12.1
20	NOV	0250	35	0.	.4	9.0	*	20	NOV	1050	131	0.	17.3	12.1	*	20	NOV	1850	227	0.	17.3	12.1
20	NOV	0255	36	0.	.4	9.0	*	20	NOV	1055	132	0.	17.3	12.1	*	20	NOV	1855	228	0.	17.3	12.1
20	NOV	0300	37	0.	.4	9.0	*	20	NOV	1100	133	0.	17.3	12.1	*	20	NOV	1900	229	0.	17.3	12.1
20	NOV	0305	38	0.	.4	9.0	*	20	NOV	1105	134	0.	17.3	12.1	*	20	NOV	1905	230	0.	17.3	12.1
20	NOV	0310	39	0.	.4	9.0	*	20	NOV	1110	135	0.	17.3	12.1	*	20	NOV	1910	231	0.	17.3	12.1
20	NOV	0315	40	0.	.4	9.0	*	20	NOV	1115	136	0.	17.3	12.1	*	20	NOV	1915	232	0.	17.3	12.1
20	NOV	0320	41	0.	.4	9.0	*	20	NOV	1120	137	0.	17.3	12.1	*	20	NOV	1920	233	0.	17.3	12.1
20	NOV	0325	42	0.	.4	9.0	*	20	NOV	1125	138	0.	17.3	12.1	*	20	NOV	1925	234	0.	17.3	12.1
20	NOV	0330	43	0.	.4	9.0	*	20	NOV	1130	139	0.	17.3	12.1	*	20	NOV	1930	235	0.	17.3	12.1
20	NOV	0335	44	0.	.4	9.0	*	20	NOV	1135	140	0.	17.3	12.1	*	20	NOV	1935	236	0.	17.3	12.1
20	NOV	0340	45	0.	.4	9.0	*	20	NOV	1140	141	0.	17.3	12.1	*	20	NOV	1940	237	0.	17.3	12.1
20	NOV	0345	46	0.	.4	9.0	*	20	NOV	1145	142	0.	17.3	12.1	*	20	NOV	1945	238	0.	17.3	12.1
20	NOV	0350	47	0.	.4	9.0	*	20	NOV	1150	143	0.	17.3	12.1	*	20	NOV	1950	239	0.	17.3	12.1
20	NOV	0355	48	0.	.4	9.0	*	20	NOV	1155	144	0.	17.3	12.1	*	20	NOV	1955	240	0.	17.3	12.1
20	NOV	0400	49	0.	.4	9.0	*	20	NOV	1200	145	0.	17.3	12.1	*	20	NOV	2000	241	0.	17.3	12.1
20	NOV	0405	50	0.	.4	9.0	*	20	NOV	1205	146	0.	17.3	12.1	*	20	NOV	2005	242	0.	17.3	12.1
20	NOV	0410	51	0.	.4	9.0	*	20	NOV	1210	147	0.	17.3	12.1	*	20	NOV	2010	243	0.	17.3	12.1
20	NOV	0415	52	0.	.4	9.0	*	20	NOV	1215	148	0.	17.3	12.1	*	20	NOV	2015	244	0.	17.3	12.1
20	NOV	0420	53	0.	.4	9.0	*	20	NOV	1220	149	0.	17.3	12.1	*	20	NOV	2020	245	0.	17.3	12.1
20	NOV	0425	54	0.	.4	9.0	*	20	NOV	1225	150	0.	17.3	12.1	*	20	NOV	2025	246	0.	17.3	12.1
20	NOV	0430	55	0.	.4	9.0	*	20	NOV	1230	151	0.	17.3	12.1	*	20	NOV	2030	247	0.	17.3	12.1
20	NOV	0435	56	0.	.4	9.0	*	20	NOV	1235	152	0.	17.3	12.1	*	20	NOV	2035	248	0.	17.3	12.1
20	NOV	0440	57	0.	.4	9.0	*	20	NOV	1240	153	0.	17.3	12.1	*	20	NOV	2040	249	0.	17.3	12.1
20	NOV	0445	58	0.	.4	9.0	*	20	NOV	1245	154	0.	17.3	12.1	*	20	NOV	2045	250	0.	17.3	12.1
20	NOV	0450	59	0.	.4	9.0	*	20	NOV	1250	155	0.	17.3	12.1	*	20	NOV	2050	251	0.	17.3	12.1
20	NOV	0455	60	0.	.4	9.0	*	20	NOV	1255	156	0.	17.3	12.1	*	20	NOV	2055	252	0.	17.3	12.1
20	NOV	0500	61	0.	.4	9.0	*	20	NOV	1300	157	0.	17.3	12.1	*	20	NOV	2100	253	0.	17.3	12.1
20	NOV	0505	62	0.	.4	9.0	*	20	NOV	1305	158	0.	17.3	12.1	*	20	NOV	2105	254	0.	17.3	12.1
20	NOV	0510	63	0.	.4	9.0	*	20	NOV	1310	159	0.	17.3	12.1	*	20	NOV	2110	255	0.	17.3	12.1
20	NOV	0515	64	0.	.4	9.0	*	20	NOV	1315	160	0.	17.3	12.1	*	20	NOV	2115	256	0.	17.3	12.1
20	NOV	0520	65	0.	.4	9.0	*	20	NOV	1320	161	0.	17.3	12.1	*	20	NOV	2120	257	0.	17.3	12.1
20	NOV	0525	66	0.	.4	9.0	*	20	NOV	1325	162	0.	17.3	12.1	*	20	NOV	2125	258	0.	17.3	12.1
20	NOV	0530	67	0.	.4	9.0	*	20	NOV	1330	163	0.	17.3	12.1	*	20	NOV	2130	259	0.	17.3	12.1
20	NOV	0535	68	0.	.4	9.0	*	20	NOV	1335	164	0.	17.3	12.1	*	20	NOV	2135	260	0.	17.3	12.1
20	NOV	0540	69	0.	.4	9.0	*	20	NOV	1340	165	0.	17.3	12.1	*	20	NOV	2140	261	0.	17.3	12.1
20	NOV	0545	70	0.	.4	9.0	*	20	NOV	1345	166	0.	17.3	12.1	*	20	NOV	2145	262	0.	17.3	12.1
20	NOV	0550	71	0.	.4	9.0	*	20	NOV	1350	167	0.	17.3	12.1	*	20	NOV	2150	263	0.	17.3	12.1
20	NOV	0555	72	0.	.4	9.0	*	20	NOV	1355	168	0.	17.3	12.1	*	20	NOV	2155	264	0.	17.3	12.1
20	NOV	0600	73	0.	.4	9.0	*	20	NOV	1400	169	0.	17.3	12.1	*	20	NOV	2200	265	0.	17.3	12.1
20	NOV	0605	74	0.	.4	9.0	*	20	NOV	1405	170	0.	17.3	12.1	*	20	NOV	2205	266	0.	17.3	12.1
20	NOV	0610	75	0.	.4	9.0	*	20	NOV	1410	171	0.	17.3	12.1	*	20	NOV	2210	267	0.	17.3	12.1
20	NOV	0615	76	0.	.5	9.1	*	20	NOV	1415	172	0.	17.3	12.1	*	20	NOV	2215	268	0.	17.3	12.1
20	NOV	0620	77	0.	1.0	9.4	*	20	NOV	1420	173	0.	17.3	12.1	*	20	NOV	2220	269	0.	17.3	12.1
20	NOV	0625	78	0.	1.8	9.9	*	20	NOV	1425	174	0.	17.3	12.1	*	20	NOV	2225	270	0.	17.3	12.1
20	NOV	0630	79	0.	3.0	10.2	*	20	NOV	1430	175	0.	17.3	12.1	*	20	NOV	2230	271	0.	17.3	12.1
20	NOV	0635	80	0.	4.4	10.5	*	20	NOV	1435	176	0.	17.3	12.1	*	20	NOV	2235	272	0.	17.3	12.1
20	NOV	0640	81	0.	5.9	10.9	*	20	NOV	1440	177	0.	17.3	12.1	*	20	NOV	2240	273	0.	17.3	12.1
20	NOV	0645	82	0.	7.3	11.1	*	20	NOV	1445	178	0.	17.3	12.1	*	20	NOV	2245	274	0.	17.3	12.1
20	NOV	0650	83	0.	8.6	11.3	*	20	NOV	1450	179	0.	17.3	12.1	*	20	NOV	2250	275	0.	17.3	12.1
20	NOV	0655	84	0.	9.9	11.4	*	20	NOV	1455	180	0.	17.3	12.1	*	20	NOV	2255	276	0.	17.3	12.1
20	NOV	0700	85	0.	11.1	11.5	*	20	NOV	1500	181	0.	17.3	12.1	*	20	NOV	2300	277	0.	17.3	12.1
20	NOV	0705	86	0.	12.2	11.7	*	20	NOV	1505	182	0.	17.3	12.1	*	20	NOV	2305	278	0.	17.3	12.1
20	NOV	0710	87	0.	13.2	11.8	*	20	NOV	1510	183	0.	17.3	12.1	*	20	NOV	2310	279	0.	17.3	12.1
20	NOV	0715	88	0.	14.1	11.9	*	20	NOV	1515	184	0.	17.3	12.1	*	20	NOV	2315	280	0.	17.3	12.1
20	NOV	0720	89	0.	14.9	12.0	*	20	NOV	1520	185	0.	17.3	12.1	*	20	NOV	2320	281	0.	17.3	12.1
20	NOV	0725	90	0.	15.5	12.0	*	20	NOV	1525	186	0.	17.3	12.1	*	20	NOV	2325	282	0.	17.3	12.1
20	NOV	0730	91	0.	16.1	12.1	*	20	NOV	1530	187	0.	17.3	12.1	*	20	NOV	2330	283	0.	17.3	12.1
20	NOV	0735	92	0.	16.5	12.1	*	20	NOV	1535	188	0.	17.3	12.1	*	20	NOV	2335	284	0.	17.3	12.1
20	NOV	0740	93	0.	16.8	12.1	*	20	NOV	1540	189	0.	17.3	12.1	*	20	NOV	2340	285	0.	17.3	12.1
20	NOV	0745	94	0.	17.0	12.1	*	20	NOV	1545	190	0.	17.3	12.1	*	20	NOV	2345	286	0.	17.3	12.1
20	NOV	0750	95	0.	17.2	12.1	*	20	NOV	1550	191	0.	17.3	12.1	*	20	NOV	2350	287	0.	17.3	12.1
20	NOV	0755	96	0.	17.3	12.1	*	20	NOV	1555	192	0.	17.3	12.1	*	20	NOV	2355	288	0.	17.3	12.1
							*								*							

****

PEAK FLOW	TIME		MAXIMUM AVERAGE FLOW			
			6-HR	24-HR	72-HR	23.92-HR
+ (CFS)	(HR)					
		(CFS)				
+ 0.	.00		0.	0.	0.	0.
		(INCHES)	.000	.000	.000	.000
		(AC-FT)	0.	0.	0.	0.

PEAK STORAGE	TIME	MAXIMUM AVERAGE STORAGE			
		6-HR	24-HR	72-HR	23.92-HR
+ (AC-FT)	(HR)				
17.	8.08	17.	12.	12.	12.

PEAK STAGE	TIME	MAXIMUM AVERAGE STAGE			
		6-HR	24-HR	72-HR	23.92-HR
+ (FEET)	(HR)				
12.15	8.08	12.15	11.27	11.27	11.27

CUMULATIVE AREA = .67 SQ MI

1

RUNOFF SUMMARY
FLOW IN CUBIC FEET PER SECOND
TIME IN HOURS, AREA IN SQUARE MILES

	OPERATION	STATION	PEAK FLOW	TIME OF PEAK	AVERAGE FLOW FOR MAXIMUM PERIOD 6-HOUR	24-HOUR	72-HOUR	BASIN AREA	MAXIMUM STAGE	TIME OF MAX STAGE
+	HYDROGRAPH AT	DRAI	356.	6.58	143.	73.	73.	.67		
+	ROUTED TO	Pump	213.	6.58	34.	9.	9.	.67		
+	ROUTED TO	POND	0.	.00	0.	0.	0.	.67		
+									12.15	8.08

*** NORMAL END OF HEC-1 ***

Spreadsheet C.1: Storage-Elevation Relationship

Elevation (ft NAVD)	Surface Area (sf)	Surface Area (acres)		Volume (ac-ft)	Volume in Park
-12.5	608	0.0140	Wet well	0	
-4.1	1154	0.0265		0.17	
-4	1252	0.0287		0.17	
6	1252	0.0287		0.46	
7.9	1252	0.0287		0.51	
8	3103	0.0712	Detention Pond	0.52	0.00
9	36771	0.8441		0.98	0.46
10	111163	2.5520		2.68	2.16
11	287511	6.6003		7.25	6.74
12	480440	11.0294		16.07	15.55
13.1	1067790	24.5131		35.61	35.10

Spreadsheet C.2: Storage Routing at California Landings Park						
		143	cfs Pump Station Capacity			
Time (hour)	1% Inflow (cfs)	Pumped to Creek (cfs)	Overflow to Park (ac-ft)	Volume in Park (ac-ft)	Ponding Elevation (feet NAVD)	
0	0	0	0	0	n/a	
0.08	0	0	0	0	n/a	
0.17	1	1	0	0	n/a	
0.25	2	2	0	0	n/a	
0.33	4	4	0	0	n/a	
0.42	7	7	0	0	n/a	
0.50	9	9	0	0	n/a	
0.58	12	12	0	0	n/a	
0.67	14	14	0	0	n/a	
0.75	16	16	0	0	n/a	
0.83	17	17	0	0	n/a	
0.92	18	18	0	0	n/a	
1.00	19	19	0	0	n/a	
1.08	20	20	0	0	n/a	
1.17	21	21	0	0	n/a	
1.25	21	21	0	0	n/a	
1.33	21	21	0	0	n/a	
1.42	21	21	0	0	n/a	
1.50	22	22	0	0	n/a	
1.58	22	22	0	0	n/a	
1.67	22	22	0	0	n/a	
1.75	22	22	0	0	n/a	
1.83	22	22	0	0	n/a	
1.92	22	22	0	0	n/a	
2.00	22	22	0	0	n/a	
2.08	22	22	0	0	n/a	
2.17	23	23	0	0	n/a	
2.25	25	25	0	0	n/a	
2.33	27	27	0	0	n/a	
2.42	30	30	0	0	n/a	
2.50	34	34	0	0	n/a	
2.58	37	37	0	0	n/a	
2.67	39	39	0	0	n/a	
2.75	42	42	0	0	n/a	
2.83	43	43	0	0	n/a	
2.92	45	45	0	0	n/a	
3.00	46	46	0	0	n/a	
3.08	47	47	0	0	n/a	
3.17	49	49	0	0	n/a	
3.25	53	53	0	0	n/a	
3.33	57	57	0	0	n/a	
3.42	62	62	0	0	n/a	
3.50	67	67	0	0	n/a	
3.58	72	72	0	0	n/a	
3.67	76	76	0	0	n/a	
3.75	80	80	0	0	n/a	

Spreadsheet C.2: Storage Routing at California Landings Park						
		143	cfs Pump Station Capacity			
Time (hour)	1% Inflow (cfs)	Pumped to Creek (cfs)	Overflow to Park (ac-ft)	Volume in Park (ac-ft)	Ponding Elevation (feet NAVD)	
3.83	83	83	0	0	n/a	
3.92	85	85	0	0	n/a	
4.00	87	87	0	0	n/a	
4.08	89	89	0	0	n/a	
4.17	91	91	0	0	n/a	
4.25	92	92	0	0	n/a	
4.33	93	93	0	0	n/a	
4.42	93	93	0	0	n/a	
4.50	93	93	0	0	n/a	
4.58	93	93	0	0	n/a	
4.67	93	93	0	0	n/a	
4.75	93	93	0	0	n/a	
4.83	93	93	0	0	n/a	
4.92	93	93	0	0	n/a	
5.00	94	94	0	0	n/a	
5.08	94	94	0	0	n/a	
5.17	94	94	0	0	n/a	
5.25	95	95	0	0	n/a	
5.33	96	96	0	0	n/a	
5.42	97	97	0	0	n/a	
5.50	97	97	0	0	n/a	
5.58	98	98	0	0	n/a	
5.67	99	99	0	0	n/a	
5.75	100	100	0	0	n/a	
5.83	100	100	0	0	n/a	
5.92	101	101	0	0	n/a	
6.00	101	101	0	0	n/a	
6.08	109	109	0	0	n/a	
6.17	135	135	0	0	n/a	
6.25	180	143	0.25	0.25	8.55	
6.33	237	143	0.65	0.90	9.26	
6.42	293	143	1.03	1.94	9.87	
6.50	335	143	1.32	3.26	10.24	
6.58	356	143	1.47	4.72	10.56	
6.67	356	143	1.47	6.19	10.88	
6.75	346	143	1.40	7.59	11.10	
6.83	334	143	1.32	8.90	11.25	
6.92	321	143	1.23	10.13	11.39	
7.00	308	143	1.14	11.27	11.51	
7.08	295	143	1.05	12.31	11.63	
7.17	281	143	0.95	13.26	11.74	
7.25	266	143	0.85	14.11	11.84	
7.33	249	143	0.73	14.84	11.92	
7.42	230	143	0.60	15.44	11.99	
7.50	212	143	0.48	15.92	12.04	
7.58	195	143	0.36	16.27	12.08	

Spreadsheet C.2: Storage Routing at California Landings Park						
		143	cfs Pump Station Capacity			
Time (hour)	1% Inflow (cfs)	Pumped to Creek (cfs)	Overflow to Park (ac-ft)	Volume in Park (ac-ft)	Ponding Elevation (feet NAVD)	
7.67	182	143	0.27	16.54	12.06	
7.75	170	143	0.19	16.73	12.07	
7.83	161	143	0.12	16.85	12.07	
7.92	153	143	0.07	16.92	**12.08**	
8.00	147	143	0.03	16.95	12.08	
8.08	141	143	-0.01	16.94	12.08	
8.17	135	143	-0.06	16.88	12.07	
8.25	128	143	-0.10	16.78	12.07	
8.33	121	143	-0.15	16.63	12.12	
8.42	112	143	-0.21	16.41	12.10	
8.50	104	143	-0.27	16.14	12.07	
8.58	97	143	-0.32	15.83	12.03	
8.67	91	143	-0.36	15.47	11.99	
8.75	85	143	-0.40	15.07	11.95	
8.83	81	143	-0.43	14.64	11.90	
8.92	77	143	-0.45	14.19	11.85	
9.00	74	143	-0.48	13.71	11.79	
9.08	72	143	-0.49	13.22	11.74	
9.17	70	143	-0.50	12.72	11.68	
9.25	68	143	-0.52	12.20	11.62	
9.33	65	143	-0.54	11.67	11.56	
9.42	63	143	-0.55	11.12	11.50	
9.50	61	143	-0.56	10.55	11.43	
9.58	60	143	-0.57	9.98	11.37	
9.67	58	143	-0.59	9.39	11.30	
9.75	57	143	-0.59	8.80	11.45	
9.83	56	143	-0.60	8.20	11.32	
9.92	55	143	-0.61	7.60	11.19	
10.00	55	143	-0.61	6.99	11.06	
10.08	54	143	-0.61	6.38	10.92	
10.17	54	143	-0.61	5.76	10.79	
10.25	55	143	-0.61	5.16	10.66	
10.33	57	143	-0.59	4.57	10.53	
10.42	59	143	-0.58	3.99	11.08	
10.50	61	143	-0.56	3.42	10.74	
10.58	63	143	-0.55	2.87	14.26	
10.67	65	143	-0.54	2.33	8.00	
10.75	66	66	0.00	2.33	n/a	
10.83	67	67	0.00	2.33	n/a	
10.92	68	68	0.00	2.33	n/a	
11.00	69	69	0.00	2.33	n/a	
11.08	70	70	0.00	2.33	n/a	
11.17	71	71	0.00	2.33	n/a	
11.25	72	72	0.00	2.33	n/a	
11.33	73	73	0.00	2.33	n/a	
11.42	75	75	0.00	2.33	n/a	

Spreadsheet C.2: Storage Routing at California Landings Park						
		143	cfs Pump Station Capacity			
Time (hour)	1% Inflow (cfs)	Pumped to Creek (cfs)	Overflow to Park (ac-ft)	Volume in Park (ac-ft)	Ponding Elevation (feet NAVD)	
11.50	77	77	0.00	2.33	n/a	
11.58	79	79	0.00	2.33	n/a	
11.67	80	80	0.00	2.33	n/a	
11.75	81	81	0.00	2.33	n/a	
11.83	82	82	0.00	2.33	n/a	
11.92	83	83	0.00	2.33	n/a	
12.00	83	83	0.00	2.33	n/a	
12.08	84	84	0.00	2.33	n/a	
12.17	84	84	0.00	2.33	n/a	
12.25	83	83	0.00	2.33	n/a	
12.33	81	81	0.00	2.33	n/a	
12.42	79	79	0.00	2.33	n/a	
12.50	77	77	0.00	2.33	n/a	
12.58	75	75	0.00	2.33	n/a	
12.67	74	74	0.00	2.33	n/a	
12.75	72	72	0.00	2.33	n/a	
12.83	71	71	0.00	2.33	n/a	
12.92	70	70	0.00	2.33	n/a	
13.00	70	70	0.00	2.33	n/a	
13.08	69	69	0.00	2.33	n/a	
13.17	69	69	0.00	2.33	n/a	
13.25	68	68	0.00	2.33	n/a	
13.33	68	68	0.00	2.33	n/a	
13.42	68	68	0.00	2.33	n/a	
13.50	68	68	0.00	2.33	n/a	
13.58	68	68	0.00	2.33	n/a	
13.67	68	68	0.00	2.33	n/a	
13.75	68	68	0.00	2.33	n/a	
13.83	68	68	0.00	2.33	n/a	
13.92	68	68	0.00	2.33	n/a	
14.00	69	69	0.00	2.33	n/a	
14.08	68	68	0.00	2.33	n/a	
14.17	68	68	0.00	2.33	n/a	
14.25	67	67	0.00	2.33	n/a	
14.33	65	65	0.00	2.33	n/a	
14.42	63	63	0.00	2.33	n/a	
14.50	61	61	0.00	2.33	n/a	
14.58	59	59	0.00	2.33	n/a	
14.67	57	57	0.00	2.33	n/a	
14.75	56	56	0.00	2.33	n/a	
14.83	54	54	0.00	2.33	n/a	
14.92	53	53	0.00	2.33	n/a	
15.00	53	53	0.00	2.33	n/a	
15.08	52	52	0.00	2.33	n/a	
15.17	52	52	0.00	2.33	n/a	
15.25	51	51	0.00	2.33	n/a	

Spreadsheet C.2: Storage Routing at California Landings Park						
		143	cfs Pump Station Capacity			
Time (hour)	1% Inflow (cfs)	Pumped to Creek (cfs)	Overflow to Park (ac-ft)	Volume in Park (ac-ft)	Ponding Elevation (feet NAVD)	
15.33	52	52	0.00	2.33	n/a	
15.42	52	52	0.00	2.33	n/a	
15.50	52	52	0.00	2.33	n/a	
15.58	53	53	0.00	2.33	n/a	
15.67	53	53	0.00	2.33	n/a	
15.75	53	53	0.00	2.33	n/a	
15.83	53	53	0.00	2.33	n/a	
15.92	53	53	0.00	2.33	n/a	
16.00	54	54	0.00	2.33	n/a	
16.08	54	54	0.00	2.33	n/a	
16.17	54	54	0.00	2.33	n/a	
16.25	53	53	0.00	2.33	n/a	
16.33	53	53	0.00	2.33	n/a	
16.42	52	52	0.00	2.33	n/a	
16.50	52	52	0.00	2.33	n/a	
16.58	51	51	0.00	2.33	n/a	
16.67	51	51	0.00	2.33	n/a	
16.75	51	51	0.00	2.33	n/a	
16.83	50	50	0.00	2.33	n/a	
16.92	50	50	0.00	2.33	n/a	
17.00	50	50	0.00	2.33	n/a	
17.08	50	50	0.00	2.33	n/a	
17.17	49	49	0.00	2.33	n/a	
17.25	48	48	0.00	2.33	n/a	
17.33	46	46	0.00	2.33	n/a	
17.42	43	43	0.00	2.33	n/a	
17.50	41	41	0.00	2.33	n/a	
17.58	38	38	0.00	2.33	n/a	
17.67	37	37	0.00	2.33	n/a	
17.75	35	35	0.00	2.33	n/a	
17.83	34	34	0.00	2.33	n/a	
17.92	33	33	0.00	2.33	n/a	
18.00	32	32	0.00	2.33	n/a	
18.08	31	31	0.00	2.33	n/a	
18.17	31	31	0.00	2.33	n/a	
18.25	30	30	0.00	2.33	n/a	
18.33	31	31	0.00	2.33	n/a	
18.42	31	31	0.00	2.33	n/a	
18.50	32	32	0.00	2.33	n/a	
18.58	32	32	0.00	2.33	n/a	
18.67	33	33	0.00	2.33	n/a	
18.75	33	33	0.00	2.33	n/a	
18.83	34	34	0.00	2.33	n/a	
18.92	34	34	0.00	2.33	n/a	
19.00	34	34	0.00	2.33	n/a	
19.08	35	35	0.00	2.33	n/a	

Spreadsheet C.2: Storage Routing at California Landings Park						
		143	cfs Pump Station Capacity			
Time (hour)	1% Inflow (cfs)	Pumped to Creek (cfs)	Overflow to Park (ac-ft)	Volume in Park (ac-ft)	Ponding Elevation (feet NAVD)	
19.17	35	35	0.00	2.33	n/a	
19.25	35	35	0.00	2.33	n/a	
19.33	35	35	0.00	2.33	n/a	
19.42	36	36	0.00	2.33	n/a	
19.50	36	36	0.00	2.33	n/a	
19.58	37	37	0.00	2.33	n/a	
19.67	37	37	0.00	2.33	n/a	
19.75	37	37	0.00	2.33	n/a	
19.83	37	37	0.00	2.33	n/a	
19.92	37	37	0.00	2.33	n/a	
20.00	38	38	0.00	2.33	n/a	
20.08	38	38	0.00	2.33	n/a	
20.17	38	38	0.00	2.33	n/a	
20.25	37	37	0.00	2.33	n/a	
20.33	37	37	0.00	2.33	n/a	
20.42	37	37	0.00	2.33	n/a	
20.50	36	36	0.00	2.33	n/a	
20.58	35	35	0.00	2.33	n/a	
20.67	35	35	0.00	2.33	n/a	
20.75	35	35	0.00	2.33	n/a	
20.83	34	34	0.00	2.33	n/a	
20.92	34	34	0.00	2.33	n/a	
21.00	34	34	0.00	2.33	n/a	
21.08	34	34	0.00	2.33	n/a	
21.17	35	35	0.00	2.33	n/a	
21.25	38	38	0.00	2.33	n/a	
21.33	42	42	0.00	2.33	n/a	
21.42	47	47	0.00	2.33	n/a	
21.50	52	52	0.00	2.33	n/a	
21.58	57	57	0.00	2.33	n/a	
21.67	60	60	0.00	2.33	n/a	
21.75	64	64	0.00	2.33	n/a	
21.83	66	66	0.00	2.33	n/a	
21.92	69	69	0.00	2.33	n/a	
22.00	71	71	0.00	2.33	n/a	
22.08	72	72	0.00	2.33	n/a	
22.17	73	73	0.00	2.33	n/a	
22.25	73	73	0.00	2.33	n/a	
22.33	73	73	0.00	2.33	n/a	
22.42	72	72	0.00	2.33	n/a	
22.50	70	70	0.00	2.33	n/a	
22.58	69	69	0.00	2.33	n/a	
22.67	68	68	0.00	2.33	n/a	
22.75	67	67	0.00	2.33	n/a	
22.83	67	67	0.00	2.33	n/a	
22.92	66	66	0.00	2.33	n/a	

Spreadsheet C.2: Storage Routing at California Landings Park						
		143	cfs Pump Station Capacity			
Time (hour)	1% Inflow (cfs)	Pumped to Creek (cfs)	Overflow to Park (ac-ft)	Volume in Park (ac-ft)	Ponding Elevation (feet NAVD)	
23.00	66	66	0.00	2.33	n/a	
23.08	65	65	0.00	2.33	n/a	
23.17	64	64	0.00	2.33	n/a	
23.25	62	62	0.00	2.33	n/a	
23.33	59	59	0.00	2.33	n/a	
23.42	56	56	0.00	2.33	n/a	
23.50	52	52	0.00	2.33	n/a	
23.58	49	49	0.00	2.33	n/a	
23.67	46	46	0.00	2.33	n/a	
23.75	44	44	0.00	2.33	n/a	
23.83	42	42	0.00	2.33	n/a	
23.92	41	41	0.00	2.33	n/a	
24.00	40	40	0.00	2.33	n/a	

Tab 9

Field Operations Levee Inspection Guidelines

WATERSHEDS ISO 9001:2000 and ISO 14001 certified Santa Clara Valley Water District	DOCUMENT NUMBER WW75161	REVISION R1 Effective Date: December 19, 2006

Printed copies are for reference only. See the Watershed Operations Internal Website for the released version.

1. PURPOSE and SCOPE:

Adequate levee inspection and maintenance is essential for providing a reliable flood protection system, reducing the risk of flooding and loss of life and property, as well as maintaining compliance with State and Federal regulations for funding and flood insurance requirements. Adequate levee maintenance also ensures the accessibility and serviceability during flood events for emergency work.

This document describes general procedures and guidelines for field operations levee inspection and record keeping. The "levee" as defined here refers to all elements of the flood protection system. This includes the embankment itself and any stability or seepage berms, toe drains, flood walls, relief wells, and any waterside erosion protection system. It also includes other ancillary structures, facilities and appurtenances encroaching on the levee.

2. REFERENCE DOCUMENTS:

	Levee Safety Technical Guidance Manual
	Annual Levee Inspection Report
	Event Levee Inspection Report
	Facility Maintenance Guidelines/Agreements
	As-Built Levee Plans
	SMP Binder (BMP Manual/Permits and Supporting Material)
	FC 441 (03-21-89)
	Request for Services (Engineering Services Division- Survey Request)
WQ75101	Field Operations Work Order Process
WQ75115	Develop Engineering Field Instructions
WW75100	Vegetation Control Work Instructions
WF75118	Ordinance Violation Form
WF75161	Levee Field Inspection Rating Guide
WF75165	Field Inspection Checklist
	Levee Inventory List (watershed specific)

3. DEFINITIONS:

Levee – An embankment raised to prevent a watercourse from flooding. The "levee" as defined here refers to all elements of the flood protection system. This includes the embankment itself and any stability or seepage berms, toe drains, flood walls, relief wells, and any waterside erosion protection system. It also includes other ancillary structures, facilities and appurtenances encroaching on the levee.

Net grade – The as-built elevation of a levee.

Event driven inspection –
An inspection that should take place during or immediately after a natural hazard such as flood, earthquake, storm and other events having the potential of damaging the flood control system

4. Requirements:

ISO 9001
7.5.1 Control of Production and Service Provision

ISO 14001
4.4.6 Operational Control

Other Requirements
District Pesticide Policy (AD-8.2)

SMP Permits & CEQA documents

5. MONITORING AND MEASUREMENT:

None

6. Procedures/Guidelines

6.0.1 Field Operations Levee/Work Inspection Flow Chart

The following flowchart represents typical critical paths from initial levee inspection to final work initiation. Although this flowchart cannot be used for every levee inspection/work scenario, it is shown here to represent a basis for most typical situations.

LEVEE INSPECTION/WORK FLOWCHART

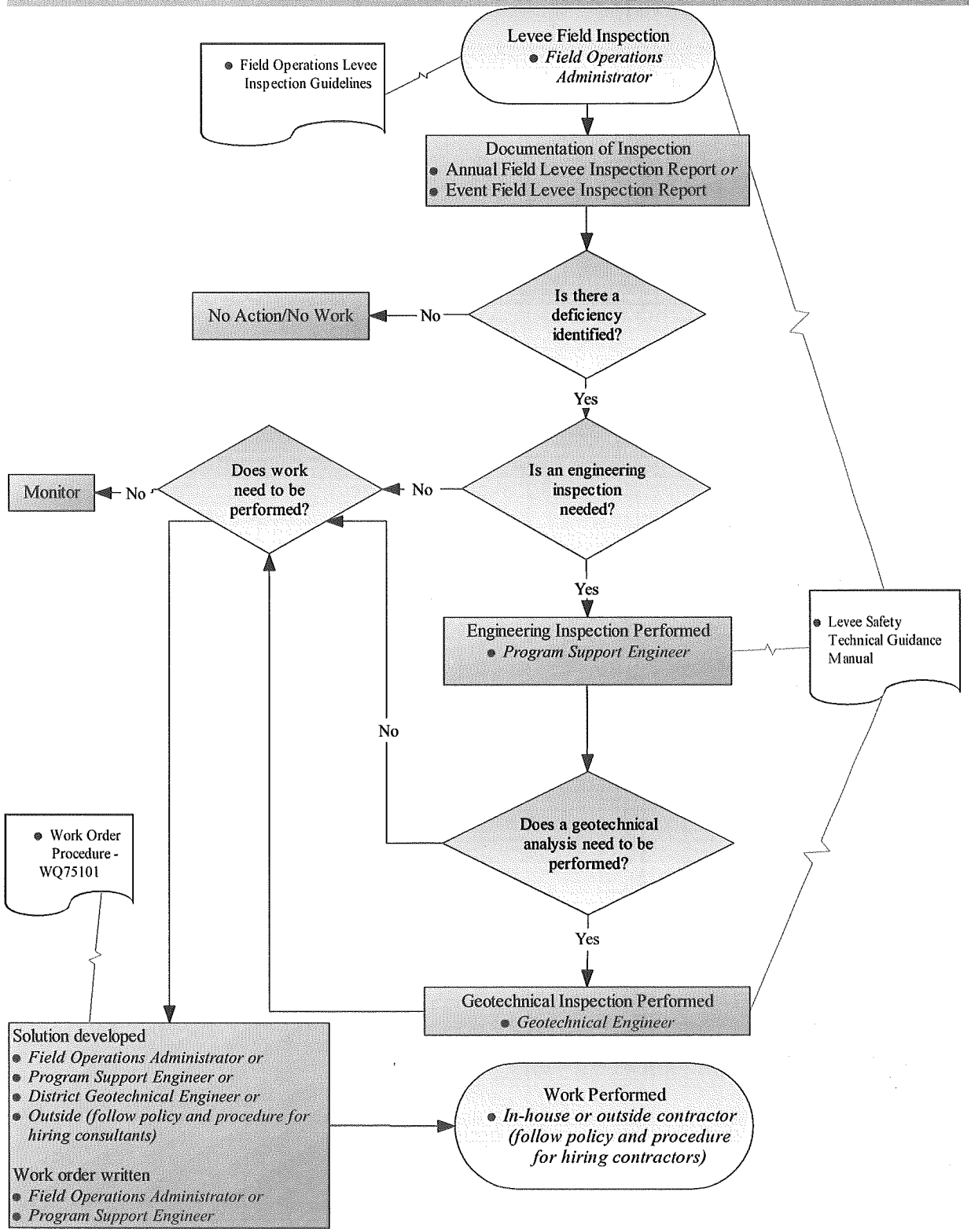

6.1.0 Field Operations Levee Inspection Procedure

Overview	Details	Quality Records
(1) Plan inspections (Field Operations Administrator (FOA))	• **Routine Field Levee Inspections** are conducted by the Field Operations Administrator to inventory deficiencies including those that may threaten the integrity of the levees within the watershed. • Inspection frequency should be governed by government minimum requirements, facility maintenance guidelines/agreements and the perceived needs for inspections. In absence of documented mandated inspection frequencies, levees should be inspected at least annually. This inspection may be scheduled at least annually, so that any needed repairs could be designed and constructed prior to the next rainy season. • Identify all District levees within each Watershed using the levee inventory list. The Levee Inventory List is compiled, maintained, and kept by FOA. • Prepare a schedule of levee inspections	Levee Inventory List
↓		
(2) Inspect Levees (Field Operations Administrator (FOA))	• The annual inspection involves walking the levees and noting any observable distress. All relevant aspects are noted in section in section 9, ADDENDA: Levee Inspection Guidelines should be inspected and documented. • The Field Inspection Checklist shall be used to capture all field gathered data. Field-gathered data including location, description of findings and photo documentation are transferred into the Oracle online photo archive database and then compiled into an Annual Levee Inspection Report. • The results from the levee field inspections are categorized in inspection reports providing site specific information for on-going monitoring and prioritizing deficiencies. The report is also used to identify and prioritize other minor routine maintenance in levees. • A report of inspection will be prepared by the *field operations administrator* for permanent record, reference, and as a basis for needed remedial work for all periodic inspections. This report should be based on a systematic field inspection of each facility	Field Inspection Checklist Levee Inspection Report

Overview	Details	Quality Records
	and its individual components regarding its safety, stability, and operational adequacy.	
↓		

(3)
 	
Event driven Inspections
 	
(Field Operations Administrator (FOA))
	• **Event driven inspections** should also take place during or immediately after a natural hazard such as flood, earthquake, storm and other events having the potential of damaging the flood control system.
	• A record of emergency investigation containing all pertinent information should be prepared and filed as part of the flood control system record.
	• There should be additional inspections after significant events such as floods and earthquakes. The emphasis of these inspections will depend on the event triggering the inspection.
	  ○ Specific items to be checked should include: waterside erosion protection and encroachments, evidences of seepage, levee settlement, slumps, lateral spreading, cracking, evidence of liquefaction (boils and cracking), and slope failures.
	  ○ Other items to be observed and reported should include any mechanical equipment and facilities such as pipes, gates and valves, inlet and outlet structures, and bridge abutments.
	• The earthquake inspection should be particularly urgent if the earthquake were to occur just before or during the rainy season.
	• During flood periods, frequent patrols of the levee should be made to locate flood-related deficiencies in levees, floodwalls and other flood control structures and facilities. The specific frequency of these patrols will depend on the flood level, and may vary from daily to essentially continuously.
	• A report of an event driven inspection will be prepared by the FOA for permanent record, reference, and as a basis for needed remedial work for all periodic inspections. Field-gathered data including location, description of findings and photo documentation are transferred into the Oracle online photo archive database and then compiled into an Event Levee Inspection Report.
		Event Levee Inspection Report

↓		
(4) Deficiency Correction	• If a deficiency revealed during the course of the field levee inspection requires correction, a solution is developed by the FOA and implemented.	

Overview	Details	Quality Records
(Field Operations Administrator (FOA))	• FOA will document any work required in accordance with WQ75101 Field Operations Work Order Process • If the FOA determines that a deficiency revealed during the course of the field levee inspection requires engineering analysis, the Watershed *program support engineer* shall be consulted and if necessary, a solution developed. The Watershed program support engineer will develop a solution in accordance with WQ75115 Develop Engineering Field Instructions. • If the *Watershed program support engineer* determines that a geotechnical inspection is necessary, a *geotechnical engineer* or *outside consultant* shall be consulted, and if necessary, a solution developed.	

7. Quality Records:

QUALITY RECORD	Location Kept	Filing Order	Duration Kept	Disposition	Comments
Levee Safety Technical Guidance Manual	Online at the watershed released work instructions webpage	N/A	permanently		
As-Built Levee Plans	central files, project leads	facility name, number and date	permanently		
BMP Checklists	BMP Binder & Work Order Package	Activity, Facility Number, & Date	Until close of fiscal year	Binders archived in Stream Water Quality	
Maximo WO Daily	work order package	facility number & date	until close of fiscal year	archived in field operations vault	
Facility Maintenance Guidelines/ Agreements	central files, project leads, online permit database	facility name, number and date	permanently		

QUALITY RECORD	Location Kept	Filing Order	Duration Kept	Disposition	Comments
Levee Field Inspection Checklist	field operations administrator's office and computer	facility name, number and date	permanently		
Annual Levee Inspection Report	field operations administrator's office and computer	facility name, and date	permanently		
Event Levee Inspection Report	field operations administrator's office and computer	facility name and date	permanently		
Levee Inventory List	field operations administrator's office and computer	facility name and date	permanently		

8. Change History:

Date	Revision	Comments
12/19/06	R1	New release

9. ADDENDA:

Levee Inspection Guidelines

More detailed information can be in the Levee Safety Technical Guidance Manual

The guidelines listed below were derived from the Levee Safety Technical Guidance Manual (29 April 2002) and are intended as a general basis for conducting field operations levee inspections. All aspects of the guidelines will not apply to every levee situation and must be applied on a case-by-case basis as appropriate.

Flood Control Levees

Levee Geometry

Inspection should identify any apparent deviations from the as-built geometry of the levee. Levee embankments should be maintained to not less than the net grade and section by replacing any loss of material from the crest, slopes, or any bench/berm. Ruts, washes, slides and subsidences should be noted and promptly repaired and the entire embankment maintained sufficiently smooth for power mowing. Levee crests should be graded as necessary to drain freely and prevent impoundment of rain water. When the crest of the levee is used as maintenance road, and unless the crest road is paved in accordance with standard roadway pavement and traffic criteria, the levee crest should be covered by at least 6 inches of a gravel/aggregate base overlying a filter fabric.

Cracking

During the levee inspection, any observed cracks along the crest or the side slopes should be recorded for further assessment of impact on levee integrity. Longitudinal cracks with down scarps toward the levee slope may be an indication of incipient slope instability. Generally these surface cracks will exacerbate potential sloughing or sliding during wet and prolonged rainy seasons. As the water infiltrates the cracks, it adds lateral hydrostatic pressures on the walls of the cracks and hence promotes potential slips. Random cracks that do not show any sign of down slope movements are generally caused by high shrink-swell levee material, such as high-plasticity clay or organic rich material. The long term cycles of shrink-swell may cause the levee material to deteriorate and weaken. It is recommended that these cracks be repaired as soon as reported.

Erosion and Condition of Slope Protection

Erosion or scour of levees and banks commonly occurs along non-protected levee and bank slopes. The amount and extent of erosion depend typically on the flow velocity, material-type irregularities and contacts between hard and soft material. Silty and sandy unconsolidated alluvium are highly susceptible to erosion and scour. Even levees and banks equipped with erosion protection can experience scour during high river stages. Usually these occurrences take place in areas where the erosion protection system has not been well maintained and has deteriorated with time, or in areas where the erosion protection system was under-designed for the damaging flood. Erosion protection comes in various forms; from concrete surfacing and rock protection to more environmentally friendly solutions such as bio-engineered slope protection, to non-protection by design to allow the river to meander and run its natural course. The latter usually is associated with a system of set-back levees.

When slope erosion protection is provided, observations during the levee inspection should ascertain that the erosion protection is maintained in accordance with the intent of the design; that the levee maintains its uniformity and its integrity; that no irregularities are developing that may become points of weakness. If such events are observed, repairs should be undertaken immediately to bring the protection system to its original design.

Erosion and scour are probably the leading cause of levee failures during flood events. Levee material, rock, plastic sheeting (Visqueen), and filter fabric should be stockpiled near the flood control system in locations where it is quickly and efficiently accessible for emergency fight/repairs.

Levee Settlement and Subsidence

The levee crest may be lowered over time due to settlement or subsidence.

Settlement is a lowering due to consolidation of underlying compressible soils under new applied loads. Typically settlements under the self-weight of the levee are estimated prior to construction, and the levee is overbuilt by an appropriate amount. However, there may be other factors causing later levee settlements. There may be compressible layers or lenses that were not adequately recognized in design. There may have been later nearby construction that has applied additional loads on the soils under the levee. There may have been loss of ground from under the levee due to internal erosion or due to adjacent excavations. Or there may have been slumping of the entire levee due to overstressing of foundation soils.

Levee settlements and differential settlements, and their observation, are particularly important for levees constructed on compressible soils, as is typically the case for levees built near the Bay.

Subsidence is a lowering of the levee crest over some length of the levee, due to deep-seated compression of soil strata caused by extraction of water, gas or oil, or due to underground mining. Other causes of long-term subsidence are compressibility of organic peat layers as a result of ongoing oxygen reduction and decomposition (i.e. due to farming practice).

In either case, the lowering of the levee crest might compromise the flood protection of the subject levee. Levee inspection should look for signs of crest lowering over short stretches of the levee crest. Any such evidence should be noted and followed promptly by a topographic survey of the levee crest. Levee crest lowering over some length (say, hundreds of feet) can probably only be identified by an elevation survey. Such surveys are advisable at regular internals (i.e. 5-year intervals).

Landside Seeps and Boils

Seepage is prevalent along flood control levees. Generally the flood control system first built around the turn of the century consisted of dredging/excavating local materials (undiscriminated) to build heterogeneous earth embankments, by hydraulic filling or by dry construction with nominal compaction. Similarly the foundations supporting the constructed levees were typically not engineered to remove weaknesses. At that time, the levee system was probably built to provide sufficient lead time for a flood fight response. However, in today's urban environment with permanent structures and facilities, a higher (permanent) protection level is required. Because of the condition of the levees and foundation, seepage is often observed during flood events. Both seepage through the levee and underseepage are common. Pervious layers within the levees or in the foundation have caused seeps to occur on the side slopes of the levees and seeps and boils near the levees' landside toe. Emergency response during a flood event typically involves the construction of sandbag rings around boils to slow the migration of fines out of the foundation soils by allowing a hydrostatic head to build up inside the sandbag ring.

When observed, seeps and boils should be recorded in the field noting location, size, and amount of soil ejected with the flow of water. A note should also be made as to whether the boils are stable or growing in size. If the seeps and boils are evolving and give indication of potential deteriorating conditions, an evaluation should be made to assess the criticality of the situation and develop prompt remedial measures.

Prevention of Encroachment

Inspection should verify that the levees are not encroached upon. Buildings, structures, and storage of miscellaneous materials or equipment should not be permitted on the levee. Refuse dumps are an item of frequent concern and should not be permitted. Following each high water season, any drift which has been deposited on the channel and levee slopes should be removed promptly.

In areas where landside seepage berms are not presently provided, but where foundation conditions indicate that such berms may be needed to control underseepage, consideration should be given to preventing encroachment into the area that future berms may occupy.

River Channel

The river channels and overflow banks are natural areas of planned and unplanned riparian vegetation. Unplanned growth, if abundant, can restrict channel hydraulic capacity, particularly at constricted locations such as at bridge overpasses, culverts and other river crossings. It is recognized that most of the vegetation and trees within the river channel and banks foster and restore riparian corridors and shaded riverine canopy that are necessary and essential for terrestrial and aquatic life. Habitat is highly regulated by State and Federal agencies. If serious obstructions, due to vegetation growth, threaten the flood control system, these observations should be noted and reported. If the problem has been identified both from the field observation and analysis models, than corrective measures should be developed.

Sediments tend to deposit in areas of grade lowering energy dissipating structures and diversion facilities. The inspection should note and report the degree of silting that is occurring along these facilities, and make recommendations for cleaning and de-silting the obstructed facilities.

Floodwalls and Retaining Walls

As part of the periodic inspections, floodwalls and retaining walls in levees should be inspected for any distress including: cracking, undermining (scour, erosion at the wall footing), settlement, misalignment, and any other signs that could potentially affect the structural integrity of the walls. The levee inspector should look for and record with photographs and drawings, indicating exact locations with respect to levee miles and offset distances from the levee centerline, any signs of:

- Wall cracks, fissures, chipping, and breaks or spalls
- Settlement and offsets
- Out of plumb and misaligned sections of walls
- Seepage, boils, and saturated areas
- Scour holes and erosion
- Roots that may undermine the wall footing
- Accumulation of trash, debris or any undesirable rubbish
- Unauthorized encroachment such as: floating plants or boats against or tied up to the floodwall.

Structures, Facilities and Appurtenances

Various facilities and appurtenances encroach on the levees. Care should be taken to verify during inspections that these facilities are operating in satisfactory conditions. Because these facilities generally create a hard contact with the levee/bank material, inspection for scour and undermining at these localities is important. Items for inspection should verify that:

- Pipes, gates, and valves are in good working conditions and that no erosion is occurring around pipes and drainage structures.
- Grade control and energy dissipating structures are not undermined and exposed or silted up.
- Drainage ditches and channels are open and clear from overgrowth and any undesirable rubbish that may impact the normal flow and proper discharge. Note abnormal occurrence of silt and sand mounds within the drainage ditches.
- Drainage inlet structures are inspected and kept free from debris and accumulation that may cause clogging.
- Flap gates on storm drainage discharge pipe outlets are kept clean from accumulated debris between the gates and the pipes which could impede the normal function of the gates.
- Bridge and culvert abutments should be checked for structural distress and erosion effects.
- Pumps are well maintained and in good working condition.

Miscellaneous Levee Facilities and Appurtenances

Miscellaneous levee facilities that are constructed on, over or through the levee should be maintained in a good state of repair and/or in good operating condition. The condition of these facilities should be inspected at least annually, and those items that are operative only during high river stages should be checked carefully and repaired as necessary immediately prior to the high water season. Relief wells should be checked during periods of high water. Wells that do not flow for an extended period of time may have to be tested by pumping to determine the extent of deterioration. Where wells are found to be critically deteriorated, they should be rehabilitated by cleaning, surging, and pumping. Check valves should be inspected to ensure that they open freely and that the gaskets are in good condition.

Periodic Elevation Surveys

Periodic surveys of the elevation of the levee crest are advisable to monitor any potential deviation from the design levee profile. Specific facility maintenance guidelines and/or agreements may dictate survey requirements.

Santa Clara Valley
Water District

SHREE DHARASHEK

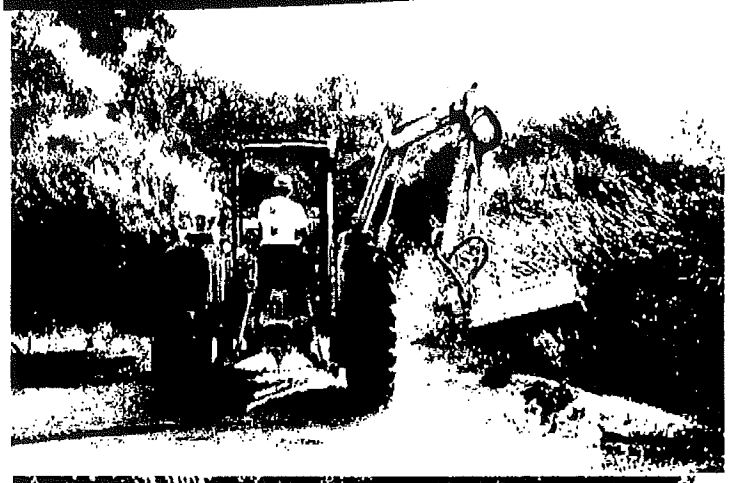

Final Environmental Impact Report for the Multi-Year Stream Maintenance Program

August 2001

II.A. SUMMARY - FINAL ENVIRONMENTAL IMPACT REPORT

The entire summary from the draft EIR has been reproduced here with additions under the FEIR indicated by underlined text and deletions indicated by ~~strikeout~~.

A. THE SANTA CLARA VALLEY WATER DISTRICT

The Santa Clara Valley Water District ("District") is a special purpose governmental agency responsible for providing water supply and flood protection for Santa Clara County, California in cost effective and environmentally responsible manner. For flood protection, all creeks in Santa Clara County with a watershed greater than 320 acres are in the District's jurisdiction.

B. PROPOSED PROJECT: THE STREAM MAINTENANCE PROGRAM

1. Changes in the Final Environmental Impact Report

Two major changes have been made in the Final Environmental Impact Report (FEIR) in response to comments: the Modified Pajaro River Basin Alternative is designated as the Preferred Alternative, and additional mitigation is proposed for certain types of bank protection work.

To reduce the environmental effects of the project to wetlands, the Preferred Alternative is revised to be the Modified Pajaro River Basin Alternative rather than the Multi-Year Program Alternative. Under the Modified Pajaro River Basin Alternative, herbicides would continue to be the primary method by which vegetation is managed in the Santa Clara Basin. Because of concerns regarding the gradual environmental change to wetlands, herbicide use in the Pajaro River Basin will be limited to upland areas and the control of non-native invasive plants.

As described in detail in revised Appendix E of the SMP, additional mitigation is proposed for bank protection projects which include rock or impervious structures. A minor additional change in the FEIR includes clarification of the Llagas Creek and Pajaro River areas which is defined as outside the scope of routine maintenance.

2. The Scope of the Stream Maintenance Program

The Stream Maintenance Program (SMP) describes a proposed program for conducting routine stream and canal maintenance. The program is intended to be ongoing and can be modified as conditions change. The program is intended to apply to three major activities, sediment removal, vegetation management, and bank protection, and a group of minor activities. The program is intended to cover these activities wherever they may occur in the District's jurisdiction, subject to several specific limitations.

The SMP incorporates several explicit steps for evaluating and reporting the effectiveness of the mitigation in the Program (see SMP Figure 3-1, SMP Resource Protection Protocol). This cycle of annual evaluation and improvement makes the SMP capable of adapting to new information and changing conditions to improve Best Management Practices (BMPs) effectiveness. It is expected that the full suite of resource protection incorporated in the SMP will allow the District to minimize environmental effects under a wide range of actual work needs.

3. Sediment Removal

Sediment removal occurs when an accumulation of sediment (1) reduces flood water conveyance capacity, (2) prevents facilities or appurtenant structures from functioning as intended, or (3) impedes fish passage and access to fish ladders. Thus the overall purpose is to ensure the proper function of District facilities.

The District estimates that it removes an average of 80,000 cubic yards of sediment on about 16 miles of channel per year in Santa Clara County. The actual quantity and location varies from year-to-year depending, in part, on rainfall of the past season. Cumulatively, sediment removal is projected for approximately 60 miles of streams. Sediment removal from canals is estimated to be less than 1000 cubic yards per year.

Sediment removal generally occurs between July 1 and October 15. A variety of heavy equipment is used. The average duration of a sediment removal project is 10 days. Appropriate temporary dams and pipes are used if water must be bypassed around the site during work. Excavated sediment is disposed at a landfill or other suitable site.

3. Vegetation Management

Vegetation management removes plant growth which blocks channels or which reduces flood flow. Vegetation management helps maintain the ability of channels to function as flood protection channels and also provides control of invasive, non-native plants and control of weeds at revegetation sites. The District also manages vegetation to protect levees and concrete linings from plant roots; to meet local fire codes; to provide visual clearance of a facility; and to provide access along maintenance roads. Depending on the original design and the characteristics of the channel, the frequency of vegetation management varies from annually to every few years.

In many creek sections, both sediment removal and ~~aquatic herbicide application~~ vegetation management are done in different years within the maintenance cycle. For example, in the year following sediment removal, herbaceous wetland vegetation may become established, and in the third year, may pose a potential flood hazard. Herbicide is applied to kill the vegetation, and herbicide application may continue in subsequent years before sediment accumulates until it eventually reaches a point where flood capacity is significantly reduced and sediment removal is again required. Or, other methods of vegetation management, such as mechanical or hand control methods, can be used instead of herbicides in the years between sediment removal.

Herbicides are used extensively and are preferred by reason of lower cost over mechanical and hand control methods. Currently, the District does not use herbicides in the Pajaro River Basin ("South County"), but would do so on a limited basis under the preferred alternative for the SMP. The herbicide use in the Pajaro River Basin would be limited to upland areas and (including adjacent upland areas, channel banks, channel benches, levee slopes, mainenance roads and firebreaks above the channel bottom) for control of invasive exotic plants ~~on approximately 56 miles of channel, 11 miles of which would be done in conjunction with sediment removal~~. Vegetation in these areas of the Pajaro River Basin is currently controlled by hand or mechanical methods.

Currently, the District uses glyphosate (Monsanto's Roundup® Pro and Aquamaster®, an aquatic formulation formerly marketed as Rodeo®) to control in-channel vegetation. Upland herbicide spraying applies to levees, unpaved maintenance roads, District right-of-way, and along some property lines. Pre-emergent herbicides control vegetation on levees and access roads by preventing the germination of weed seeds. The District uses a range of pre-emergent herbicides, including pendimethalin and chlorsulfuron. This particular application may change to reflect new restrictions under consideration by the California Department of Pesticide Regulation.

4. Bank Protection

Bank protection involves an action by the District to repair stream banks that are eroding or are in need of preventative erosion protection. The District may implement bank protection when the problem (1) causes or could cause significant damage to a property or adjacent property, (2) is a public safety concern, (3) adversely affects transportation or recreational use, (4) adversely affects water quality or beneficial uses, or (5) adversely affects riparian habitat. Based on past experience, the District estimates that an average of one linear mile of stream banks

may be repaired each year spread over some 30 to 50 individual work sites. Work is usually done between July 1 and October 15.

Bank repairs may take several forms from installing "hard" structures (e.g., rock blankets, concrete, sack concrete, gabions) to "soft" structures (e.g., willow brush mattresses, log crib walls, pole plantings) or a combination of hard and soft structures. An important feature of the SMP is a programmatic approach to impact assessment and mitigation at bank protection sites that takes into account fisheries and riparian resources values (SMP Appendix E). The bank protection work would include both hardscape and softscape designs with mitigation provided at a 1:1 ratio by area of streambank for rock hybrid designs with plantings and a 3:1 ratio by area of streambank for impervious hardscape and other rock designs without plantings. On an average annual basis, no more than one-half mile of impervious hardscape designs will be installed. ~~The District will install no more than 50% of future bank protection projects under the SMP as hardscape.~~

5. Minor Activities

Minor maintenance activities include trash removal, installation of fences and gates; repairs to restore access roads and levees; grading small areas to improve drainage and reduce erosion; repair to existing structures (e.g. replacement of concrete linings and culverts); sediment removal at stream gages, outfalls, culverts, flap gates, tide gates, inlets, grade control structures, fish ladders, fish screens; graffiti removal; tree pruning along maintenance roads; irrigation, weeding, replanting and other maintenance at mitigation sites; removal of obstructions to flow at bridges, streamflow measuring stations, box culverts, storm drain outfalls and drop structures; removal of trees in danger of falling, fallen trees, and associated debris to maintain channel design capacity; and ground squirrel and rodent control with traps, smoke bombs, and pesticides.

6. Mitigation Incorporated in the Project

Chapter 4 of the SMP presents policies to protect resources during the implementation of routine stream maintenance activities. These policies provide guidance to District managers and staff in the environmental review, design, and implementation of individual stream maintenance projects. BMPs have been developed to implement each of these policies and to mitigate environmental impacts identified in the EIR.

a. *Best Management Practices (BMPs)*

The SMP has specifically developed BMPs applicable to routine stream maintenance, and these are incorporated into the SMP (SMP Appendix G). The BMPs provide mitigation for potential Water Quality, Vegetation, Wildlife and Fisheries, Land Use and Cultural Resources impacts. In the Final Environmental Impact Report, many of the BMPs have been revised in response to comments on the Draft Environmental Impact Report.

b. Wetland and Riparian Compensation

Over the long-term, the SMP has the potential to significantly affect the ecological and biological environment of Santa Clara County by cumulatively affecting wetland habitats, including tidal and freshwater wetlands and riparian habitats. Though measures in this EIR will avoid or reduce these impacts, the District acknowledges that it would not be to a less-than-significant level if compensatory mitigation were not provided.

The SMP includes a compensatory mitigation package to compensate for the significant residual impacts of sediment removal and vegetation management on in-stream wetlands and riparian vegetation. The compensatory mitigation package includes the following components: (1) tidal wetland restoration; (2) freshwater wetland creation;

(3) stream and watershed protection; and (4) control of giant reed. This mitigation is described in detail in Chapter 5 of the SMP.

Bank protection is addressed by the Programmatic Impact and Mitigation for Bank Protection protocol (SMP Appendix E) which compares the intensity of the work method and amount of hardscape against the environmental sensitivity of the work location. ~~Impact and mitigation are balanced between individual projects.~~ Appendix E provides a matrix for assessing the impacts and mitigation needed for bank protection measures. Additionally, a mitigation program has been added to the SMP for bank protection activities that include some form of hardscape or rock.

c. Special-Status Species

The avoidance and minimization measures incorporated in the project, described in SMP Chapter 4, are considered sufficient to reduce most, but not necessarily all, potential impacts of the SMP on special-status species to a less-than-significant level. Residual impacts are reduced to less than significant by specific provisions in the compensatory mitigation program described above.

7. SMP Exclusions

a. Activities Outside of Routine Maintenance are Excluded

In the course of CEQA review, the District determined that there were possible channel maintenance activities that may not be accommodated by the BMPs and other programmatic mitigation proposed as part of the SMP. The following maintenance activities are excluded from the SMP: sediment removal and vegetation management on stream reaches above the 1,000-foot elevation contour which is above the reservoirs; hardscape bank protection projects which occur in high quality fisheries habitat or existing high quality riparian habitat, and ~~initial removal of in-channel trees~~ any sediment removal, wetland vegetation control, or removal of in-channels trees in Llagas Creek downstream of ~~Luchessa Avenue~~ Highway 152 to the confluence with the Pajaro River and in the Pajaro River within Santa Clara County.

b. Other Activities are Excluded

Routine maintenance restores flood conveyance capacity to design levels, but does not increase design capacity. The District also plans and carries out flood protection projects as Capital Improvement Projects (CIP). The CIP are subject to separate engineering and environmental review which will take into account project specific impact and mitigation. Once the CIP is completed, maintenance at the project site will be incorporated into the SMP.

The SMP does not include certain other District maintenance activities such as percolation ponds, in-stream water infiltration barriers (summer dams), or dam and reservoir maintenance.

C. REGULATORY SETTING

1. CEQA

The District acts as the lead agency in fulfilling the requirements of the California Environmental Quality Act (CEQA).

EXCERPTS FROM

SANTA CLARA VALLEY WATER DISTRICT

STREAM MAINTENANCE PROGRAM

Chapter 1
INTRODUCTION

This chapter describes the objectives and applicability of the Santa Clara Valley Water District's (District) Stream Maintenance Program (Program). As a foundation for understanding the resource protection and maintenance issues discussed in this report, this chapter also defines routine stream maintenance and briefly describes the District's facilities where stream maintenance is required. In conclusion, this chapter provides a summary of related programmatic documentation that is required for implementation of the Stream Maintenance Program and the organization of subsequent chapters.

A. PROGRAM PURPOSE AND OBJECTIVES

The Stream Maintenance Program is designed to provide long-term guidance to the District to implement routine stream and canal maintenance projects in order to meet the District's flood protection and water supply mandates in a feasible, cost-effective, and environmentally-sensitive manner. This authority is provided by the District Act, as amended. The main goals of preparing the Stream Maintenance Program are to maintain streams and canals to meet their original design to provide flood protection and water supply, coordinate the various aspects of routine stream maintenance to better achieve this goal, and assist in obtaining multiyear permits. The Stream Maintenance Program only applies to District facilities.

The objectives of the Stream Maintenance Program are as follows:

1. Standardize practices and protocols for routine sediment removal, vegetation management, and bank protection in and around the streams and related facilities within the District's jurisdiction.

2. Identify cost-effective routine stream maintenance practices and protocols.

3. Ensure routine stream maintenance activities reflect the District's policies of environmental protection and stewardship.

4. To the extent practical, avoid or minimize adverse environmental effects and encourage preservation and restoration.

5. Establish effective and economically-practical compensatory mitigation for environmental impacts from routine stream maintenance activities.

6. Establish practices and protocols that optimize operational flexibility and allow the integration of lessons learned and improvements in Best Management Practices.

The Stream Maintenance Program will be used by District staff to ensure that routine stream maintenance practices are conducted in an efficient, consistent, and environmentally-sensitive manner.

B. APPLICABILITY AND USE OF THE STREAM MAINTENANCE PROGRAM

The Stream Maintenance Program applies to all of the District's routine stream maintenance activities, including three major types of activities: sediment removal, vegetation management, and bank protection. Many of these activities are undertaken to ensure flood conveyance capacity is maintained in existing streams. In addition, routine maintenance includes vegetation removal in and around the streams and canals within the District's jurisdiction to ensure appropriate access and fire control. More minor maintenance activities are also included in the definition of routine stream maintenance.

The stream maintenance work area addressed by this Stream Maintenance Program includes the streams, canals, and any adjacent property that the District owns or holds an easement for access and maintenance. The District does not provide maintenance on private property when no easement exists. The maintenance work area is the stream channel or canal itself, typically extending to 20 feet past the top of bank when access is provided, and less when access is not provided. Creeks with constructed levees may require a wider maintenance easement. The maintenance work area is typically less than the District's permitting jurisdiction, which is within 50 feet of the top of bank of the streams.

The Stream Maintenance Program is designed to be a process and policy document that can be adopted by the District. Once adopted, the Stream Maintenance Program will be used by the District to guide the implementation of routine stream maintenance activities and projects. The Stream Maintenance Program outlines specific measures, protocols, policies, and reporting requirements to ensure that routine stream maintenance projects are implemented in an efficient and environmentally-sensitive manner. This Stream Maintenance Program is subject to future revisions as improvements and modifications are made to reflect the best available knowledge, technology, and practices.

The Stream Maintenance Program is intended to establish an ongoing District program of indefinite length. The Stream Maintenance Program uses a 20-year planning time frame to project the level of future work, and this same time frame is used by the Environmental Impact Report (EIR) to evaluate cumulative impact. Permits for stream maintenance from regulatory agencies are expected to last for a period of 10 years, after which the District would apply for a renewal. The Stream Maintenance Program will be reviewed annually as described in Chapter 3 to determine if adjustments to the BMPs need to be made. The overall program will be reviewed in 10 years as part of the permit renewal process.

The 20-year time frame was used because this is the period of time over which future work areas and impacts can be reliably projected. Projections for future work under the Stream Maintenance Program are based on an analysis of historical data going back to 1977. All forms of maintenance show a consistent pattern; however, projections of future stream maintenance activities for the Stream Maintenance Program cannot represent the exact extent of work that will occur. Actual stream maintenance activities vary from year to year. There may be some future routine maintenance activities that are within the District's jurisdiction and are consistent with the descriptions of work and impacts evaluated for the program overall but which were not specifically included in the District's projection of work areas. Maintenance at such sites is still included in the program as long as it does not result in significant environmental effects substantially different than those evaluated for the program as a whole.

If routine stream maintenance practices are substantially changed at any time, the program will be updated. If these changes would result in significant impacts not evaluated in the EIR, then the EIR will also be updated. New mitigation measures would not be required unless new significant impacts are identified.

Routine stream maintenance does not include emergency repair. A situation is considered an "emergency" if it is a sudden, unexpected occurrence involving a clear and imminent danger that demands immediate action to prevent or mitigate loss of or damage to life, health, property, or essential public services (Public Resource Code Section 21060.3).

Routine stream maintenance does not alter the flood conveyance or water supply capacity of a stream or canal. Large construction projects and Capital Improvement Projects (CIP) are not considered routine stream maintenance and are not addressed through the Stream Maintenance Program. For new CIPs, long-term maintenance impacts and any new mitigation will be analyzed under the CIP's separate future environmental review and compared to those impacts and mitigation previously evaluated for that reach of stream under the Stream Maintenance Program. New mitigation will only be required if the impacts of the maintenance under the CIP are in excess of impacts included in the Stream Maintenance Program for the same reach of creek. After the environmental review is completed for the CIP, the Stream Maintenance Program will be updated to incorporate any revisions to the mitigation program, and the implementation of the new maintenance and its annual reporting will be conducted in the same manner as indicated in Chapter 3.

The installation of new or major modification of fish ladders is not included in the Stream Maintenance Program. See also the "Overview of the Streams and Canals within the District's Jurisdiction" below for clarification on what areas are included or excluded from the Stream Maintenance Program.

C. STREAM MAINTENANCE ACTIVITIES

The following provides a brief discussion of the major activities addressed by the Stream Maintenance Program. For more information on these activities and why they are implemented, please refer to Chapter 2. In addition, the Stream Maintenance Program applies to more minor activities such as fence repair, trash removal, and removal of downed trees or other blockages.

1. Sediment Removal

Sediment removal is the act of mechanically removing sediment that has been deposited within a stream. Typically, sediment is removed when it: (1) reduces stream capacity, (2) prevents facilities or appurtenant structures from functioning as intended, or (3) impedes fish passage and access to fish ladders. Sediment removal can occur in the same physical area as vegetation removal.

2. Vegetation Management

The District removes vegetation in and adjacent to creeks and canals to maintain the ability of channels to function as flood protection facilities and canals to transport water. Vegetation removal can occur in the same physical area as sediment removal. In addition, vegetation is removed to meet local fire code requirements and to reduce combustible weeds and grasses on property adjacent to the streams within the District's jurisdiction. The control of invasive nonnative vegetation is another purpose for which the District undertakes vegetation control. Vegetation management can be accomplished through mowing, discing, hand clearing, or herbicide applications (depending on the environmental conditions of the site).

3. Bank Protection

Bank protection involves any action by the District to repair streambanks that are eroding as well as preventative erosion protection. The District implements bank protection when the problem (1) causes or could cause significant damage to a property or adjacent property, (2) is a public safety concern, (3) negatively affects transportation, (4) negatively affects beneficial uses of surface water, or (5) negatively affects riparian habitat. Repairs may take several forms ranging from the installation of "hard" structures (i.e., rock, concrete, sack concrete, gabions) to the use of "soft" structures (i.e., willow brush mattresses, log crib walls, pole plantings), or a combination of hard and soft structures. Bank protection also includes preventative maintenance to ensure that banks do not erode in the future. Such bank protection can reduce sedimentation and improve water quality.

Routine stream maintenance includes three major activities, as follows: (1) sediment removal activities that are designed to restore the flood conveyance capacity of existing District channels or associated features (e.g., tide gates), (2) vegetation management in and around streams and canals in the District's jurisdiction, including removal of

vegetation for flood capacity, access and fire control, and (3) bank protection activities necessary to protect District or other facilities. Routine stream maintenance also includes more minor maintenance activities, such as maintenance of revegetation sites, fence repair, trash removal, and removal of downed trees or other blockages from streams.

D. OVERVIEW OF THE STREAMS AND CANALS WITHIN THE DISTRICT'S JURISDICTION

For the purpose of this Stream Maintenance Program, "streams" are defined as natural watercourses and modified channels and canals that are within the District's jurisdiction. In this Stream Maintenance Program, streams include both the waterway and its immediate geographical corridor, including riparian corridors.

[Text describing the District's jurisdiction within the San Francisco Bay and Pajaro River watersheds is removed for brevity.]

E. RELATED PROGRAMMATIC DOCUMENTATION

Because this Stream Maintenance Program has been designed to guide the implementation of routine stream maintenance projects and activities over the long-term, it addresses stream maintenance at a general or "programmatic" level. As such, this document provides the guidelines and implementation measures that characterize how stream maintenance will be conducted by the District.

In addition to this document, several other programmatic requirements must be met before the Stream Maintenance Program can be implemented, as follows:

- **Program Environmental Impact Report**. Consistent with the California Environmental Quality Act (CEQA), an EIR will be prepared and certified by the District for this Stream Maintenance Program. The EIR will evaluate the potential environmental impacts of the Stream Maintenance Program and determine measures to mitigate impacts.

- **Long-Term Permits**. The District is seeking the approval of a long-term permit for routine stream maintenance activities in streams under the jurisdiction of the United States Army Corps of Engineers (USACE), including Waters of the United States and special aquatic sites (wetlands) pursuant to Section 404 of the Clean Water Act as well as Section 10 of the Rivers and Harbors Act. This Individual Permit would grant general authorization and set conditions for all routine stream maintenance activities subject to jurisdiction of the USACE. In addition, the District will be required to comply with requirements under Section 7 of the Federal Endangered Species Act (ESA). The California Regional Water Quality Control Boards (RWQCB) will also require compliance with Waste Discharge Requirements (WDR) permits and Section 401 of the Clean Water Act. The Santa

Clara Valley is divided into two RWQCBs, based on major drainage areas. These are the San Francisco Bay RWQCB and the Central Coast RWQCB.

The District will also revise Memorandums of Understanding with the California Department of Fish and Game (CDFG) for stream maintenance activities. The CDFG will review routine stream maintenance activities for consistency with California's endangered species protection regulations.

The San Francisco Bay Conservation and Development Commission (BCDC) regulates activities occurring in tidally-influenced areas. The BCDC renewed Permit No. M77-113 on July 28, 2000, to cover the District's routine stream maintenance activities that occur in or near tidal waters of San Francisco Bay. The expiration date is June 1, 2005.

The permits and approvals from these agencies for routine stream maintenance are expected to last for a period of 5 to 10 years, after which time applications will be made for renewal of these permits and approvals.

In addition to these programmatic requirements for adoption and implementation of the Stream Maintenance Program, the District uses a variety of supporting documentation to guide stream maintenance activities....Examples include BMPs, the Maintenance Guidelines, and Fish Relocation Operation Guidelines....

Chapter 2
AN OVERVIEW OF STREAM MAINTENANCE ACTIVITIES

The Stream Maintenance Program provides long-term guidance for the implementation of routine stream maintenance work. Three major types of stream maintenance activities are sediment removal, vegetation management, and bank protection. This chapter provides an overview of these stream maintenance activities and their average frequency and extent on an annual basis. Also included in this Stream Maintenance Program are minor maintenance activities described in this chapter.

The projections for work area amount under the Stream Maintenance Program are based on approximately 20 years of historical data. The numbers provided are program-level projections of future stream maintenance activities and are not intended to represent the exact extent of work which will occur in the future. As described further below, stream maintenance activities can vary from year to year. There may be some future routine maintenance activities in streams and canals within the District's jurisdiction that are consistent with the descriptions of work and impacts overall but which were not specifically included in the District's projection of work areas. Maintenance at such sites is still included in the program as long as it does not result in significant environmental effects substantially different than those evaluated for the Stream Maintenance Program as a whole.

Routine maintenance occurs on a year-round basis. However, it is scheduled to avoid or minimize impacts to environmental resources. Typically, routine maintenance that requires the operation of heavy equipment in the channel is limited to the dry season.

A. SEDIMENT REMOVAL

1. Overview

Sediment removal is the act of mechanically removing sediment deposited within a stream. Typically, sediment removal is indicated when it (1) reduces capacity, (2) prevents facilities or appurtenant structures from functioning as intended, or (3) impedes fish passage and access to fish ladders.

The District's purposes in performing sediment removal activities are to ensure that a stream will continue to provide flood capacity and to ensure that appurtenant facilities are working as designed. Sediment is usually removed from modified channels. However, sediment is also sometimes removed from natural creeks on an occasional basis to provide proper functioning of outfalls, culverts, bridge crossings, and stream gauging stations, for example. Occasionally, sediment is removed from canals to maintain their function as water conveyance facilities. Sediment is removed from canals on an irregular basis, with similar equipment used for sediment removal from streams. Based on seven sediment removal projects undertaken in canals from 1992 to 2000, the average annual

amount of sediment removed from canals is estimated to be less than 1,000 cubic yards. Sediment removal in canals takes place primarily in Almaden-Calero Canal, Coyote-Alamitos Canal, Coyote Canal, and Coyote Canal Extension.

In most cases, sediment deposition is a natural process that occurs where the stream gradient flattens out in the valley floor or where the gradient is otherwise flat over long reaches. In developed areas, this deposition affects flood flow capacities.

Typical equipment used for sediment removal includes excavators, draglines, loaders, and 10- or 20-cubic-yard dump trucks. If water must be bypassed around the site during work, water pumps and piping, and cofferdams of earth, gravel, sandbags, hay bales, rubber, or other appropriate material may be used. In some cases, a bypass channel or detention basin is appropriate to isolate a site. Saturated sediments may be temporarily placed adjacent to the work site to dry out before being removed to a landfill or to other suitable disposal or reuse sites. Most often, sediment removal projects are implemented in the dry season (summer). The District also implements BMPs to ensure that sediment removal projects have the least impact possible. The District's equipment and work methods are updated as new equipment or better methods become available. Sediment removal projects are also revised as new CIP are completed.

2. Sediment Removal Methods

The method of sediment removal is dependent on channel configuration and geometry, equipment reach and rate of production, channel type (tidal or nontidal, concrete or earth bottom), moisture content of the silt, ramp location, and access road width. For example, wide tidal reaches with a channel bottom of wet bay muds which will not support equipment require silt removal by a dragline or an excavator positioned on the top of the creek bank. This method requires wide roads for the equipment and for truck access.

Concrete-lined channels may be cleaned by pushing sediment into a pile with a bulldozer and using a loader to place the material in trucks for removal to an approved disposal site. The trucks are located at strategic points either in the channel bottom or at the top of bank depending on the method of routing the trucks. Another example is cleaning or creating a low-flow channel with excavation equipment working in the channel bottom, loading trucks either in the channel bottom or moving the sediment to trucks at the top of bank.

3. Annual Sediment Removal Activity

The District estimates that it removes an average of 80,000 cubic yards of sediment on about 16 miles of channel per year in Santa Clara County. This average includes both concrete-lined and earth-lined channels. This is an average annual quantity and will vary from year to year depending, in part, on rainfall conditions of the past season. The number of sediment removal sites each year also varies widely. Historical records show that the District removes sediment from an average of 19 sites annually but may work at as few as two sites or as many as 39 in a given year.

TABLE 2-1

[Table 2-1, which summarizes District-wide annual sediment removal activities between 1996 and 1999, is removed because it does not specifically apply to Stevens Creek. A summary of maintenance activity for Stevens Creek during the most recent fiscal year is attached.]

B. VEGETATION MANAGEMENT

1. Overview

Management of vegetation in and adjacent to creeks and canals is necessary to maintain the ability of channels to function as flood protection facilities and canals to function for water conveyance. Dense vegetation can adversely affect the ability of the channel to contain the flow of flood waters for which it was designed. Therefore, most flood protection facilities require some type of periodic vegetation control. Depending on the original design and the characteristics of the channel, the frequency of vegetation management varies from annually to every few years.

The District also plants and maintains revegetation or mitigation projects, often along creeks. In the first few years after initial planting, it is important to control weeds at revegetation sites to increase the number of native trees and shrubs which survive and to more quickly establish a self-sustaining plant community which provides wildlife habitat.

The control of invasive, nonnative plants is another purpose for which the District undertakes vegetation control. Plant species are targeted that are not native to this area of California and are known to aggressively spread. These plants can migrate into other areas where they can affect channel capacity as well as reduce native plant populations. This can lead to reduced channel capacity and overall habitat degradation. Current practice is to assign this a lower priority and do it on an ad hoc basis as it fits in with higher-priority work.

The District manages vegetation for other purposes including the protection of levees, and concrete linings from plant roots; meeting local fire codes requiring the control of combustible weeds and grasses; providing visual clearance to inspect the condition of a facility; and providing access along maintenance roads.

2. Vegetation Management Methods

Over the past 30 years, the District has continually revised vegetation management approaches to control vegetation on District facilities. This approach consists of utilizing three basic methods: hand removal (chain saws, weed-eaters, etc.); mechanical (mowing and discing); and chemical control through the use of herbicides. A method or combination of methods is chosen for each site depending on the maintenance requirements of the facility. Efficiency, economics, and the protection of public health and environmental resources are all considered in the selection of methods.

As an example, herbicides can often be a more effective vegetation control method when compared to mechanical or hand removal. This is because of their ability to spread into and damage the roots of the target plants, thus preventing resprouting. When treated with mechanical or hand methods, some woody plants, such as willows, will resprout with multiple stems. The multiple sprouts result in a greater flood protection problem and require annual control. With herbicides, annual retreatment is often necessary; however, the treatment area is greatly reduced, as only a small percentage of regrowth will occur. As a result, this program includes herbicides as the primary method by which vegetation is controlled in channels and on streambanks.

Herbicides are not broadcast sprayed across the channel, but are selectively sprayed at the plants targeted for removal by the design parameters of each particular stream reach. In some streams, only woody saplings (no greater than 2 inches in diameter at breast height) are removed in the target area, while other streams require removal of both herbaceous and woody vegetation. In upland areas, herbicides are sprayed on maintenance roads to provide a clear access area and on levee slopes to eliminate broadleaf weeds.

The District only uses herbicides according to the label directions and for uses approved by the United States Environmental Protection Agency (USEPA) and the California Department of Pesticide Regulation (DPR). Currently, the primary postemergent herbicides which the District uses are Roundup® Pro and Aqua Master® (formerly known as Rodeo®). These herbicides are formulations of the chemical glyphosate, which is a nonselective broad spectrum herbicide. Aqua Master® is approved for use in aquatic areas, whereas Roundup® Pro is not approved for application directly in water or to areas where surface water is present. Other herbicides which will be used by the District are shown in the following table.

TABLE 2-2

Herbicide Use for the Multiyear Stream Maintenance Program

Product Name	Chemical Type	Use	Average Annual Amount
Gallery	Isoxaben	Preemergent, selective to broadleaf weeds. Used on levee slopes and maintenance roads.	447 pounds
Garlon 3A	Triclopyr, triethylamine salt	Postemergent, selective to broadleaf weeds. Used on levee slopes.	5 gallons
Garlon 4	Triclopyr, triethylamine salt	Postemergent, selective to broadleaf weeds. Used on levee slopes.	62 gallons
Oust	Sulfometuron	Preemergent, nonselective. Used on access roads/firebreaks.	206 ounces

Pendulum	Pendimethalin	Preemergent, selective to grasses. Used on access roads/firebreaks.	3,576 pounds
Aqua Master (formerly known as Rodeo)	Glyphosate	Postemergent, nonselective. Approved for aquatic use. Used in channels.	750 gallons
Roundup Pro	Glyphosate	Postemergent, nonselective. Roundup used in upland areas on maintenance roads/firebreaks.	1,021 gallons
Surflan (AS)	Oryzalin	Preemergent, selective to grasses. Used on access roads, firebreaks, and landscape/ revegetation areas.	1,269 ounces
Telar	Chlorsulfuron	Preemergent, selective to broadleaf weeds. Used on levee slopes and maintenance roads.	2,140 ounces
Transline	Clopyralid	Postemergent, selective to specific broadleaf families. Some minor preemergent activity. Used for control of yellow star thistle on levee slopes/upland parcels.	16 gallons
Target Pro-spreader/ activator or Wilbur-Elias R-11 spreader activator		Surfactant used with Aqua Master®, Garlon, and Transline products.	310 gallons

In total, the District currently uses approximately 2,000 gallons of herbicides, 50 percent of which is Roundup® Pro and 35 percent is Aqua Master®. In addition, the District uses approximately 3,580 pounds of Pendulum and 450 pounds of Gallery per year. Appendix H contains a literature review of pesticides used by the District.

The Stream Maintenance Program includes the reinstatement of the use of herbicides as part of the Vegetation Management Program in the Pajaro River Basin. Herbicides are currently used as part of the Vegetation Management Program in the Santa Clara Basin, but their use was discontinued in the Pajaro River Basin (South County) at the direction of the District Board of Directors in 1974 because of complaints regarding drifting of herbicides into agricultural fields. In 1979, the District considered reinstating a herbicide program in the Pajaro River Basin. At that time, there was a general concern in the community over the use of herbicides, particularly the use of 2,4-D, and after public hearings, the District decided not to reinstate the use of herbicides in the Pajaro River Basin. As a result, the use of herbicides was also excluded on new federally-sponsored flood protection projects on Llagas Creek in the Pajaro River Basin.

Since that time, the District has revised its herbicide program to address environmental, health risk, and public safety concerns, but at the same time recognize that herbicides are a cost-effective means for maintaining flood protection and water supply facilities. Many of the improvements made to the District's herbicide program are described below:

- In 1980, the District discontinued the use of the herbicide 2,4-D.

- In 1986, the District switched to using herbicides in the sulfonylurea family which are applied at rates of ounces per acre, rather than previous herbicides which were applied at rates of pounds per acre. This step not only reduced the overall amount of herbicides being applied throughout the county, but also relied on using herbicides with a lower toxicity.

- In 1988, the District went beyond state requirements and required all District employees who handle pesticides to be certified as Qualified Applicators by the DPR. As Qualified Applicators, these employees are trained on pesticide laws and regulations, safety, and application methods and are required to receive annual training to keep updated in this field.

- Likewise, even before state requirements, the District required that a District Pest Control Advisor (PCA) prepare a pesticide use recommendation for any use of herbicide on District facilities. For the District's purposes, PCAs are required to have a relevant bachelor's degree, be trained in integrated pest management and groundwater protection, and continue to receive 40 hours of relevant training every 2 years.

- At the District, the PCA is required to conduct a field survey to assess the site conditions, types of weeds and nontarget plants, surrounding land uses, and potential wildlife use prior to writing a pesticide use recommendation. This information is used to make a recommendation with detailed instructions to the applicator regarding the type of herbicide, rate, equipment, treatment area identified on a map, target vegetation, vegetation to protect, and any special instructions relevant to the site and treatment.

- Certain types of herbicides were found as contaminants in groundwater in California's Central Valley. Although no restrictions were placed by the state on their use in Santa Clara County or on soil types found in Santa Clara County, the District voluntarily discontinued the use of certain preemergent herbicides on our facilities in 1993 to avoid any potential problems with groundwater. This practice continues today. PCAs receive groundwater training every 2 years from the DPR and receive routine updates in changes to the regulations. Though none of the regulations currently apply to this county, the District discontinues use of products that are known groundwater contaminants in other areas of the state.

- In 1994, the District voluntarily eliminated the use of residual preemergent herbicides on our groundwater recharge facilities. Today, only herbicides that are registered for use in aquatic areas are used at these locations.

- In 1996, the District retrofitted its spray trucks to include the Patchen WeedSeeker. This device utilizes a light sensor attached to the front of the spray equipment that detects the presence of chlorophyll (and, therefore, living plants) and controls individual spray heads. Instead of spraying the entire width of a facility as the spray truck passes over it, individual spray heads are turned on only as they pass over vegetated areas. This eliminates the treatment of bare ground and reduces the amount of herbicide applied by 20 to 90 percent. This equipment is primarily limited to use on flat areas where all vegetation needs to be controlled, such as maintenance roads.

- The District currently uses primarily Category III and IV herbicides. Under a ranking system developed by the USEPA, pesticide products are given an acute toxicity rating which is reflected in the warning label of the pesticide container. Category III is considered slightly toxic ("caution" warning on label) and Category IV is considered practically nontoxic (no warning language included on label).

As a result of these improvements, the District is now proposing that herbicide use be reinstated in the Pajaro River Basin. This change would require the following actions:

- The District's Board will need to adopt implementation of the Stream Maintenance Program, changing the maintenance practices in the Pajaro River Basin to include herbicides as a routine maintenance tool.

- The maintenance documents for the federally-sponsored Llagas Flood Protection Projects (PL-566 projects) will require amendment by the federal sponsoring agency, Natural Resources Conservation Service (NRCS), to include this activity.

Staff has been working with the Board and NRCS toward the implementation of this change. Both the Board and the NRCS agree this is a beneficial change.

Hand removal of vegetation is undertaken in a few locations where it is not possible to access the area with spray equipment. In some cases, the vegetation is sprayed with herbicides, and then approximately 6 months later, the dead material is removed by hand removal methods, if necessary. This latter category of work is referred to as follow-up hand removal. Follow-up hand removal of vegetation is only necessary when herbicide spraying is new to an area and there is a larger volume of dead vegetation created in the first year or two. In subsequent years, the amount of vegetative regrowth is reduced and follow-up hand removal is necessary much less frequently.

The five types of vegetation management in upland areas are: discing, mowing, herbicide application, hand removal, and removal of overhanging growth to provide maintenance access.

Upland discing occurs on upland parcels outside of the streambanks and is conducted to create firebreaks. Upland mowing consists of operating a flail mower to eliminate or reduce grasses that would cause a fire hazard during the summer. Mowing can occur

from one to three times annually at each location, usually between May and October. Mowing is conducted on the inside slope of streambanks and outboard levees slopes to create a firebreak.

Upland herbicide spraying is used on levees, unpaved maintenance roads, and along some property lines. On levees, herbicides are used primarily to keep woody vegetation and broadleaf weeds from becoming established where they will interfere with flood flow capacity, damage the levees, or hinder their inspection. Weeds and grasses are sprayed on maintenance roads to clearly define and keep open the access route. Herbicide spraying along property lines assists in establishing a firebreak. Pre and postemergent herbicides are sprayed from a truck-mounted rig or by a controlled drop applicator.

Hand removal of vegetation is conducted in upland areas where mowers cannot access, and herbicides are either not practical due to steep terrain or not allowed. Hand removal of vegetation is generally used in upland areas along property lines to establish fire breaks. Removal of overhanging growth consists of pruning trees branches that impede access roads or hang over fence lines.

3. Annual Vegetation Management Activity

The frequency of vegetation management activities varies from semiannually to once every several years, depending on the method used. Herbicide spraying in stream channels is conducted July 1 through October 15. Removal of woody vegetation by hand is conducted July 1 through March 1. Hand removal in stream channels is conducted November through December.

Vegetation management occurs in creeks, canals, and adjacent uplands. On average, vegetation management work is annually performed on approximately 4,000 acres. Within this larger work area, the targeted treatment area consists of approximately 2,000 acres. These totals include the following approximate levels of activity:

- 923 acres of vegetation management work is conducted in 222 miles of stream channels with 132 acres of the total actually receiving treatment (585 work acres or 75 acres of treated area on 166 miles in the Santa Clara Basin, and 338 work acres or 57 acres of treated area and 56 miles in the Pajaro River Basin);

- 23 acres on which vegetation management work is conducted on 27 miles of canals with 6 acres of the total actually receiving treatment; and

- 3,021 acres of uplands on which vegetation management work is performed, with 1,885 acres actually receiving treatment. Upland vegetation management is outside of the area of inundation, and generally has a buffer of grass or vegetation on the slopes between the right of way and the stream.

Vegetation management activities are relatively the same from year to year. Slight variations in flood protection activities occur due to weather patterns. For example, historically, increases in some work activities occur during flood years, with decreases in

other activities occurring during extended periods of drought. Right of way activities remain constant regardless of these weather patterns.

C. BANK PROTECTION

1. Overview

Bank protection involves an action by the District to repair streambanks that are eroding or are in need of preventative erosion protection. The District implements bank protection when the problem (1) causes or could cause significant damage to a property or adjacent property, (2) is a public safety concern, (3) negatively affects transportation or recreational use, (4) negatively affects water quality or beneficial uses, or (5) negatively affects riparian habitat. Repairs may take several forms from installing "hard" structures (e.g., rock, concrete, sack concrete, gabions) to "soft" structures (e.g., willow brush mattresses, log crib walls, pole plantings) or a combination of hard and soft structures.

Streambank erosion is a natural process, which mostly happens during major storm events. Erosion can occur because of hydraulic forces and geotechnical instabilities, and can be accelerated by human intervention and land uses. Accelerated erosion is typically a result of particular land uses that affect the stream corridor, including grazing, agriculture, and road and utility construction. Erosion of banks can result in increased sediment deposition, which can lead to decreased flood flow capacities and potential flood hazards. Erosion on banks may also cause vegetation and soil loss, damage to private or public property, transportation and utility impacts, safety hazards, and turbidity injurious to fish and aquatic life. Levee erosion may lead to failure of the structure and flooding.

Bank protection work may either occur as repair of an existing bank protection project which is failing, or as new work along a bank which is eroding. The new work is considered routine maintenance because it is either restoring the flood protection function of a modified channel or it is repairing a natural bank to its approximate condition prior to becoming an erosion problem.

Repair of existing bank protection structures occurs when these structures fail and are replaced with in-kind, in-place materials. New bank protection projects are those that repair or protect the watercourse from further degradation or erosion using the most appropriate method. This type of protection is considered maintenance if the work does not significantly alter the flood conveyance capacity of the streams.

Equipment used for bank protection may include excavators, dozers, cranes, loaders and 10- and 20-cubic-yard dump trucks, concrete trucks, and pumps and water trucks. If water must be bypassed around the site during repair work, water pumps and piping, and cofferdams of earth, gravel, sandbag, hay bales, rubber, or other suitable material may be used. In some cases, a bypass channel or detention basin is appropriate to isolate a site. Most often, bank protection projects are implemented in the dry season.

2. Bank Protection Methods

The general design criteria and plan for each of the bank protection methods used by the District are included in Appendix E [which is not included for brevity, but is available upon request]. In addition to these criteria, design of a particular bank protection project includes evaluation of other site-specific characteristics such as bank slope, shear stress, location (such as the inside or outside of a curve), soil type, flow velocity, characteristics of the channel adjacent to the site, and the available right of way. The site is evaluated for the repair method consistent with the characteristics of the site. Revegetation potential is also evaluated for each bank protection project. This potential is not only dependent upon the method of bank protection used, but also the physical properties of the stream where the repair is taking place.

In natural stream conditions where there are no flow capacity requirements, vegetation components for streambank repair are selected. In modified creek channels where the flow requirements must be retained (such as for the 100-year flood), this will often necessitate a roughness maximum which, depending on the channel design, may limit the vegetation component of the design.

A range of methods is used for bank protection, as can be exemplified by several District bank protection projects. Many of the following examples demonstrate how soft methods can be combined with harder methods when site conditions cannot maintain a purely natural solution.

- Log crib walls were used on Guadalupe River, downstream of Coleman and downstream of Woz Way and on Bodfish Creek upstream of Santa Teresa.
- Earth repairs with vegetated slopes were included in the Princevalle storm drain downstream of Chestnut, Sunnyvale East Channel downstream of Evelyn and Lower Penitencia Creek, downstream of Redwood Drive.
- Rock hybrids include Permanente Creek at Lundy Lane, Stevens Creek downstream of Fremont, and Los Gatos Creek downstream of Bascom Avenue.
- Cottonwood seedlings growing on articulated concrete mats are located on Guadalupe River upstream of Highway 880.

For all bank protection projects, the District makes an inspection of the stream upstream and downstream of a project site to determine if there is an identifiable cause of the erosion. In some cases, the cause of erosion is obvious, such as a blockage (e.g., downed tree) or weak streambanks of silt or gravel stratas. In other cases, a further inspection is conducted to determine if flows are being directed toward the bank from a source upstream, whether the channel invert is down cutting, or if illegal drainage is causing the problem. These factors can affect the bank protection approach implemented by the District.

3. Annual Bank Protection Activity

The District estimates that an average of 5,000 linear feet of banks may be repaired annually based on historical records, District experience, and current levels of funding. This is an average annual quantity and will vary from year to year. Facilities are inspected after the winter storms for damage and maintenance needs and a work plan is prepared. Under the Stream Maintenance Program, the District is committing to installing no more than 50 percent of future bank protection work using hardscape designs.

In the past 14 years, the total length of bank protection activities in an individual year ranged from approximately 1,500 to 13,000 feet. The District has completed an average of 38 bank protection jobs per year, based on historical records, but there is considerable deviation. For example, there were nine jobs in 1994 and 73 in 1987. A more detailed summary of historical bank protection activities is provided in Table 2-3.

TABLE 2-3

[Table 2-3, which describes bank protection activies from 1987-1999 is removed for brevity, because it does not apply specifically to Stevens Creek.]

Unlike sediment removal and vegetation management, the historical location of bank protection activities is not a good predictor of where future bank protection will be required. The quantity and location of bank protection activities varies greatly from year to year, based upon watershed conditions, degree of safety hazard, work load, budget, and of other work to be done in a given year.

D. MINOR MAINTENANCE ACTIVITIES

Minor maintenance activities included in this Stream Maintenance Program are: trash removal at trash racks and more generalized locations; repair and installation of fences and gates; grading and other repairs to restore the original contour of access roads and levees; grading small areas without vegetation above streambanks to improve drainage and reduce erosion; repair of structures with in-kind materials within the same footprint (such as replacement of concrete linings, culverts, pipes, valves, or similar structures); cleaning and minor sediment removal at stream gages, outfalls, culverts, flap gates, tide gates, inlets, grade control structures, fish ladders, and fish screens; graffiti removal; tree pruning along maintenance roads and fence lines to provide access and to remove hazards; irrigation, weeding, replanting, and other types of ongoing maintenance at mitigation sites; removal of obstructions to flow in the immediate vicinity (not to exceed 100 feet) of bridges, streamflow measuring stations, box culverts, storm drain outfalls, and drop structures to maintain functions of such structures; removal of trees or branches that are in imminent danger of falling, fallen trees, and associated debris to maintain channel design capacity; and ground squirrel and rodent control with traps, smoke bombs, and pesticides.

PERMITS

The following regulatory permits have been obtained for routine maintenance activities that fall under the Stream Maintenance Program described herein, including activities on Stevens Creek. The actual permits are available upon request or may be downloaded from the following site:

http://www.valleywater.org/Water/Technical_Information/Technical_Reports/index.shtm#smp

Bay Conservation and Development Commission
California Department of Fish and Game
Central Coast Regional Water Quality Control Board
United States Army Corps of Engineers
National Marine Fisheries
San Francisco Regional Water Quality Control Board
United States Fish and Wildlife Service

Lower Penitencia Creek - Calif. Circle to Conflu. w/Berryessa Ck.

WONUM	DESCRIPTION	JOB TYPE	From Station	To Station	LOCAIDE
200506608	L. PENITENCIA WSHD - FENCE REPAIR CM BLKT- D/S MILMONT DR	CORRECTIVE MAINT			3:36-85
200603449	L. PENITENCIA CRK - CAL. CIRCLE TO MILMONT - BUILD DAMS	CORRECTIVE MAINT			3,4,9
200208587	LOWER PENITENCIA CRK - U/S CALIFORNIA CIR-PALLETS IN CREEK	DEBRIS-CAPACITY			3:36-85
200829084	COYOTE D/S U/S CALIFORNIA CIRCLE CROSSING/CALIFORNIA CIR/DIXON LANDING RD.	DEBRIS-CAPACITY	0	18363	6,16,17,25
200413456	L. PENITENCIA D/S REDWOOD - COVER LEVEE W/ PLASTIC	EROSION CTRL			3:36-83
200203813	L. PENITENCIA WSHD - FENCE REPAIR CM BLKT-MILLMONT & DIXON LANDING	FENCE WORK CM			3:36:84
200211426	L. PENITENCIA WSHD - FENCE REPAIR CM BLKT-BETWEEN ABBOT AVE & CALIFORNIA CIR	FENCE WORK CM			3:36-83
200315226	L. PENITENCIA CRK WSHD T&D GN BLKT-U/S CALIFORNIA CIR TO U/S MARYLINN	GOOD NEIGHBOR			3:36-83
200315231	L. PENITENCIA WSHD - FENCE REPAIR GN BLKT-U/S CALIFORNIA CIR TO D/S MARYLINN	GOOD NEIGHBOR			3:36-84
200315233	L. PENITENCIA CRK WSHD GRAFFITI REM GN BLKT-U/S CALIFORNIA CIR	GOOD NEIGHBOR			3:36-84
200703464	GN GRAFFITI PM - L. PEN CRK - D/S MARYLIN	GOOD NEIGHBOR	0	18363	3,4,9
200708859	0GN GRAFFITI PM - L. PEN CRK - D/S MARYLIN	GOOD NEIGHBOR	0	18363	3,4,9
200711832	0 GN GRAFFITI PM - L. PEN CRK - D/S MARYLIN	GOOD NEIGHBOR	0	18363	6,16,17,25
200716321	0 GN GRAFFITI PM - L. PEN CRK - D/S MARYLIN	GOOD NEIGHBOR	0	18363	6,16,17,25
200719307	0 GN GRAFFITI PM - L. PEN CRK - D/S MARYLIN	GOOD NEIGHBOR	0	18363	6,16,17,25
200722107	GN GRAFFITI PM - L. PEN CRK - D/S MARYLIN	GOOD NEIGHBOR	0	18363	6,16,17,25
200726552	0 GN GRAFFITI PM - L. PEN CRK - D/S MARYLIN	GOOD NEIGHBOR	0	18363	6,16,17,25
200729239	0 GN GRAFFITI PM - L. PEN CRK - D/S MARYLIN	GOOD NEIGHBOR	0	18363	6,16,17,25
200733073	GN GRAFFITI PM - L. PEN CRK - D/S MARYLIN	GOOD NEIGHBOR	0	18363	6,16,17,25
200736062	0 GN GRAFFITI PM - L. PEN CRK - D/S MARYLIN	GOOD NEIGHBOR	0	18363	6,16,17,25
200739105	0 GN GRAFFITI PM - L. PEN CRK - D/S MARYLIN	GOOD NEIGHBOR	0	18363	6,16,17,25
200803405	GN GRAFFITI PM - L. PEN CRK - D/S MARYLIN	GOOD NEIGHBOR	0	18363	6,16,17,25
200804318	LWR PENTENCIA @ CALIF. AVE - REMOVE T/D CASE#10620	GOOD NEIGHBOR	0	18363	16: 36-84
200807780	0 GN GRAFFITI PM - L. PEN CRK - D/S MARYLIN	GOOD NEIGHBOR	0	18363	6,16,17,25
200807938	LOWER PENITENCIA CRK - D/S REDWOOD - FENCE REPAIR - CASE# 10746	GOOD NEIGHBOR	0	18363	6,16,17,25
200811332	0 GN GRAFFITI PM - L. PEN CRK - D/S MARYLIN	GOOD NEIGHBOR	0	18363	6,16,17,25
200815477	0 GN GRAFFITI PM - L. PEN CRK - D/S MARYLIN	GOOD NEIGHBOR	0	18363	6,16,17,25
200816885	L. PENITENCIA CRK - U/S CALIFORNIA CIRCLE - T&D REMOVAL - CASE# 11080	GOOD NEIGHBOR	0	18363	6,16,17,25
200819506	GN GRAFFITI PM - L. PEN CRK - D/S MARYLIN	GOOD NEIGHBOR	0	18363	6,16,17,25
200823546	GN GRAFFITI PM - L. PEN CRK - D/S MARYLIN	GOOD NEIGHBOR	0	18363	6,16,17,25
200826685	GN GRAFFITI PM - L. PEN CRK - D/S MARYLIN	GOOD NEIGHBOR	0	18363	6,16,17,25
200829131	COYOTE U/S CALIFORNIA CIR--CALIFORNIA CIR/DIXON LANDING RD	GOOD NEIGHBOR	0	18363	6,16,17,25
200829242	GN GRAFFITI PM - L. PEN CRK - D/S MARYLIN	GOOD NEIGHBOR	0	18363	6,16,17,25
200832805	0 GN GRAFFITI PM - L. PEN CRK - D/S MARYLIN	GOOD NEIGHBOR	0	18363	6,16,17,25
200838236	GN GRAFFITI PM - L. PEN CRK - D/S MARYLIN	GOOD NEIGHBOR	0	18363	6,16,17,25
200845293	COYOTE/LOWER PENITENCIA CRK/GRAFFITI	GOOD NEIGHBOR	0	18363	6,16,17,25

Lower Penitencia Creek - Calif. Circle to Conflu. w/Berryessa Ck.

WONUM	DESCRIPTION	JOB TYPE	From Station	To Station	LOCAIDE
200212479	L. PENITENCIA CRK WSHD SIGN WORK GN AC BLKT	GOOD NEIGHBOR AC			3:36-85
200315232	L. PENITENCIA CRK WSHD SIGN WORK GN AC BLKT-CALIFORNIA CIR TO SAN ANDREAS	GOOD NEIGHBOR AC			3:36-84
200410700	L. PENITENCIA CRK WSHD SIGN WORK GN AC BLKT-DIXON LADNING RD	GOOD NEIGHBOR AC			3:85-36
200106946	LOWER PENITENCIA CRK D - GRAFFITI REM. BLKT CA. CI @ DIXON LANDING	GRAFFITI REMOVAL			3:36-84
200406327	CREEK INSPECTION - LOWER PENITENCIA CRK 4033901	INSPECTION			
200406328	CREEK INSPECTION - LOWER PENITENCIA CRK 4033901	INSPECTION			
200406329	CREEK INSPECTION - LOWER PENITENCIA CRK 4033901	INSPECTION			
200406330	CREEK INSPECTION - LOWER PENITENCIA CRK 4033901	INSPECTION			
200406331	CREEK INSPECTION - LOWER PENITENCIA CRK 4033901	INSPECTION			
200415972	CREEK INSPECTION - LOWER PENITENCIA CREEK	INSPECTION			3,4,9
200415973	CREEK INSPECTION - LOWER PENITENCIA CREEK	INSPECTION			3,4,9
200415974	CREEK INSPECTION - LOWER PENITENCIA CREEK	INSPECTION			3,4,9
200603425	L. PENITENCIA CRK - CAL. CIRCLE TO MILMONT - VEGETATION CONTROL	MISC VEG CONTROL			3,4,9
200008583	LOWER PENITENCIA CRK WSHD - FENCE REPAIR BLANK	PROPERTY MAINT			9:98-79
200008751	LOWER PENETENCIA- U/S MILMONT CONCRETE DAM	PROPERTY MAINT			3:36-84
200603458	L. PENITENCIA CRK - CAL. CIRCLE TO MILMONT - SEDIMENT REMOVAL	SEDIMENT REMOVAL			3,4,9
200204439	LOWER PENITENCIA CREEK - REMOVE WOODY VEGETATION	VEG-NON-CHEM			4
200839501	COYOTE/L PENITENCIA MULTIPLE SITES OHG	VEG-NON-CHEM	69		6,16,17,25